ELECTRONIC CAM CONTROLS

- Conventional cam controls
- Multifunctional devices
- Expandable devices for DIN-rail mounting
- High-speed devices
- Cam controls integrated in encoder housing
- Cam controls with Fieldbus- and PROFIBUS interface
- Operating and display terminals
- Comfortable PC-programming
- Absolute rotary encoders
- Pre-assembled cables
- Dynamic switching accelerators

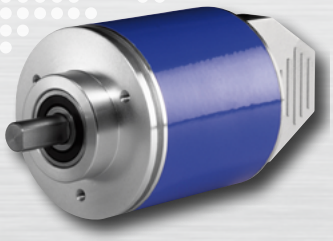

CANopen · DeviceNet · EtherCAT · EtherNet/IP · ETHERNET TCP/IP · Modbus · MPI · PROFIBUS · PROFINET

FAST SWITCHING - EVEN IN CASE OF DYNAMIC SPEEDS

Deutschmann
your ticket to all buses

Protocol Converter | Embedded Solutions | Gateways

Contents

Foreword	3
LOCON 16 and LOCON 17	4
Technical data LOCON 16 and LOCON 17	6
LOCON 24 and 48	8
Technical data LOCON 24 and LOCON 48	10
LOCON 200	12
LOCON 100	13
LOCON 90	14
Model Overview LOCON 90 / 100 / 200	15
Technical data LOCON 200	16
Technical data LOCON 100	18
Technical data LOCON 90	20
ROTARNOCK series	22
Technical data ROTARNOCK 100	24
TERM 6 and TERM 24	26
WINLOC 32®	28
Rotary encoder	30
Dynamic switching accelerator SPEEDY	38
Accessories for cam controls and encoders	42
Mass-produced cables	44
Glossary	46

Deutschmann
your ticket to all buses

Foreword

- Development and production of electronic cam controls since 1982.
- Since 1990 the brand names LOCON and ROTARNOCK stand for reliable and fast electronic cam controls.
- LOCON – The classical concept of separate control and separate actual value acquisition.
- ROTARNOCK – The intelligent solution: cam control and actual value acquisition combined in one housing.
- There is no standing still and we are continuously working on the further development of our products and the expansion of our product range. Thus the LOCON and ROTARNOCK series were adapted to the current market needs with new models. We were inspired especially through the implementation of the Fieldbus connection assocoiated with modern control and configuration concepts.

LOCON 16 and LOCON 17

Multifunctional and compact

The compact solution in DIN-format 72 mm x 96 mm (width x depth) at an overall depth of 70 mm only. With its integrated operating keyboard the unit is installed into the front plate; the version without keyboard is mounted on a DIN-rail. The „4-key user interface" has proven its worth many thousand times and it can be operated easily after a short training period. The basic version features 16 outputs, 16 programs, blockwise idle time compensation.

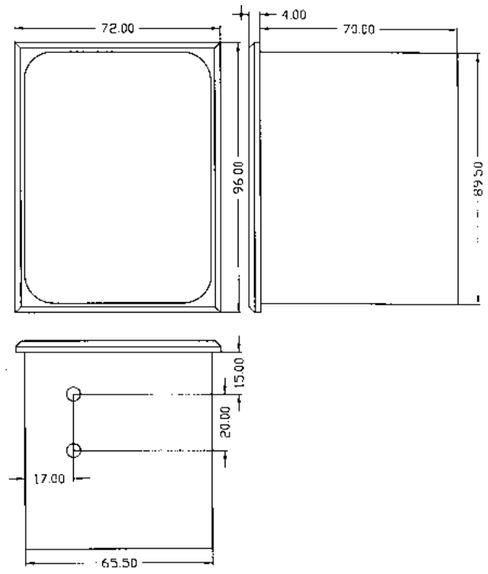

LOCON 16, 17 mit Frontplatte

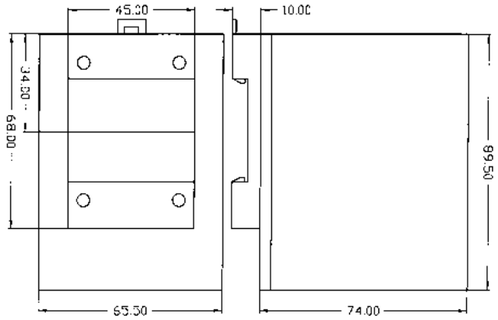

LOCON 16PM, LOCON 17PM for DINrail

Structure of the order code

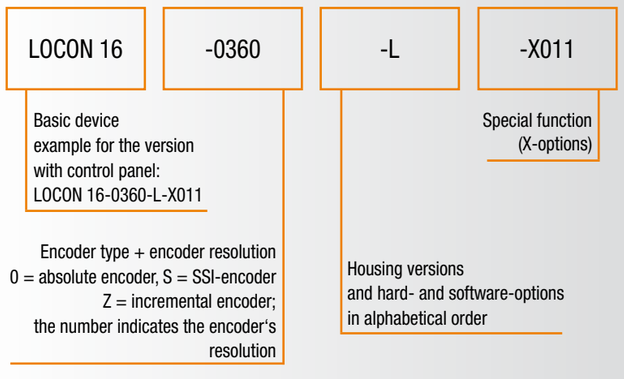

Note:
For the incremental encoder version (Z) the encoder resolution only has to be indicated in connection with the option speed indication.

Deutschmann
your ticket to all buses

Basic device

Option	Meaning	Excludes or only possible with the option	L16	L17
0360	Version for absolute encoder parallel 360 inf./rev.	All other resolutions	●	●
01000	Version for absolute encoder parallel 1000 inf./rev.	All other resolutions	●	●
04096	Version for absolute encoder parallel 4096 inf./rev.	All other resolutions	-	●
0n	Version for absolute encoder parallel (n=encoder's resolution)	All other resolutions	-	●
S1024	Version for SSI-absolute encoder 1024 inf./rev.	All other resolutions	●	●
S4096	Version for SSI-absolute encoder 4096 inf./rev.	All other resolutions	-	●
MT	Version for SSI-absolute encoder 24 bit	All other resolutions	-	-
Zn	Version for incremental encoder (n=indicate encoder's resolution at speed indication): counting range in increments	All other resolutions	1024	4096
PM	Version available without integrated control panel		❷	❷

Hard- and software-options

Code	Meaning	Excludes or only possible with the option	L16	L17
Cn	Automatic clear position (n=enter the required value)	Only for devices with Z	■	■
D	Position / speed indication Switchover takes place depending on the speed indication		■	●
H	Faster processor for lower cycle times		-	■
I	Bitwise idle time compensation	Not with L, LT	-	●
L	Blockwise idle time compensation	Not with L, LT	●	x
LT	Blockwise idle time compensation with separate turn on/ turn-off time	Not with I, L	-	■
P	Screw-plug-connector for an encoder connection instead of a connection via a 25-pole D-SUB		■	■
P108	Switching capacity 1A on 8 outputs		■	■
P116	Switching capacity 1A on 16 outputs		■	■
R	Run control function on output 16		■	■
T	Timer/program switch		x	x
U	Direction cams depending on the sense of rotation		■	■
V0	Rotation speed/position change-over definable by the customer	Not with Vn, requires D	■	■
Vn	Locked outputs (outputs can only be changed by entering a password); n=number of locked outputs; max. 15 possible	Requires option A; not with option V0	■	■
Y	Partial idle time compensation	Available with I or L	-	x
232	Interface RS232	Not with option 485	❶	❶
485	Interface RS485-DICNET® (network of up to 16 DA cam controls)	Not with option 232	❶	❶
X004	Four output-enable inputs	Not with P	-	■
X011	Speed indication scaled to customer's value	Requires option D, O, S	■	■
X016	Brake cam with quadratic idle time compensation		-	■
X?	Customized version	On request	■	■
Z	Encoder type incremental 24V signal voltage		x	x

● = Standard ■ = Optionally for an additional charge x = Optionally at no additional charge
❶ = RS232/485 switchable on board ❷ = Device is alternatively available with or without integrated control panel

Technical data LOCON 16 and LOCON 17

	Characteristics	LOCON 16	LOCON 16PM	LOCON 17	LOCON 17PM
Available versions	- with integrated keypad - without integrated keypad	● -	- ●	● -	- ●
Installation	- front panel installation - DINrail	● -	- ●	● -	- ●
Ouputs		16	16	16	16
Storable outputs		16	16	16	16
Data records (incl. output names) (number of switch-on-/switch-off points)		1936	1936	1936	1936
Actual value acquisition	- incremental encoder - counting range incremental - absolute encoder parallel Gray excess - absolute encoder parallel Gray code to bit-number - absolute encoder SSI Gray code - counting/direction inputs for incremental encoder - timer function (value is generated internally)	1024 360, 1000 – 360, 1024 ■ 1-65535 ms	1024 360, 1000 – 360, 1024 ■ 1-65535 ms	4096 360, 720, 1000, 3600 9...12 360, 1024, 4096 ■ 1-65535 ms	4096 360, 720, 1000, 3600 9...12 360, 1024, 4096 ■ 1-65535 ms
Idle time compensation (dynamic cam)	- blockwise - bitwise - separate I/O - entering the idle time in steps - partial idle time compensation	● - - 1ms - 999ms -	● - - 1ms - 999ms -	x ● ■ 1ms - 999ms x	x ● ■ 1ms - 999ms x
Cycle time in some configurations the idle time might be higher, in case of using the high-speed-version it might also be lower	- without idle time compensation (ITC) - with blockwise ITC - with bitwise ITC - with blockwise I/O ITC - high-speed-version for a lower cycle time	500µs 500µs - - -	500µs 500µs - - -	150µs 200µs 550µs 550µs ■ ab 60µs	150µs 200µs 550µs 550µs ■ ab 60µs
Software characteristics: **zero point offset** **cams are interchangeable linewise** **angle/time cams** **direction cams** **lockable outputs**	- within the complete range	● ● - ■ ■	● ● - ■ ■	● ● - ■ ■	● ● - ■ ■
Run-control-function		■[2)]	■[2)]	■[2)]	■[2)]
Speed indicator		■[1)]	■[1)]	■[1)]	■[1)]
Inputs	- for encoder signal - for program selection - for program change - for program release	10 4 1 1	10 4 1 1	12 4 1 1	12 4 1 1
Logic functions	- logic inputs - extensive logic functions - shift register	- - -	- - -	■ 4 enable-function (X04) -	■ 4 enable-function (X04) -
Programming	- teach-in programming - via integrated keypad - via Deutschmann terminal - via PC (WINLOC 32®-software) - via cam control profile	● ● ● ● ●	● - ● ● ●	● ● ● ● ●	● - ● ● ●
Data backup	- EEPROM (min. 100 years) - via transfer program on PC	● ●	● ●	● ●	● ●
Display seven-segment indication	- for position - for speed	6 digits ● ■[1)]	- - -	6 digits ● ■[1)]	- - -

	Characteristics	LOCON 16	LOCON 16PM	LOCON 17	LOCON 17PM
Status display for	- outputs - programming status - external program selection - SSI-Control - error-display - run-Control	● ● ● - ● ■	● ● ● - ● ■	● ● ● - ● ■	● ● ● - ● ■
Interface	- RS232 - RS485-DICNET®	● switchable ● switchable	● switchable ● switchable	● switchable ● switchable	● switchable ● switchable
Voltage supply 24VDC +/-20%		●	●	●	●
Max. power consumption (without load)		200mA	200mA	200mA	200mA
Output driver max. load	- 300 mA each output, max. 1A for 8 outputs at a time at 25°C ambient temperature - 700 mA each output, temporarily also 1A each ouput - outputs positive switched, short-circuit-proof	● ■ 8/16 outputs ●	● ■ 8/16 outputs ●	● ■ 8/16 outputs ●	● ■ 8/16 outputs ●
Analog outputs	- current output - voltage output	- -	- -	- -	- -
Dimensions basic device in mm	- width - height - depth	72 96 70	65,5 89,5 74	72 96 70	65,5 89,5 74
Front panel cutout		90 x 66	-	90 x 66	-
Protection class		IP54	IP20	IP54	IP20
Weight in grams		580	580	580	580

● = Standard
■ = Optionally for an additional charge
x = Optionally at no additional charge
[1)] = Automatic switchover between position and speed (speed-dependent)
[2)] = Run-control function is asssigned to output 16

LOCON 24 and 48

The Multifunctionals

Compact series with DIN size of 144 x 144 mm. With an overall depth of 44 mm only, these models feature 24, 32 or 48 outputs. 64 programs can be selected either via the integrated control panel or that can be selected externally, a memory of 1000 data records as well as an extensive range of functions round off the features.
The version with integrated control panel for front panel installation (either IP54 or IP65) offers the operating convenience you are looking for: Seven-segment display for position and speed, 2-line LCD with a multi-lingual, user-configurable menu, and both, a decimal keypad and a function keypad.

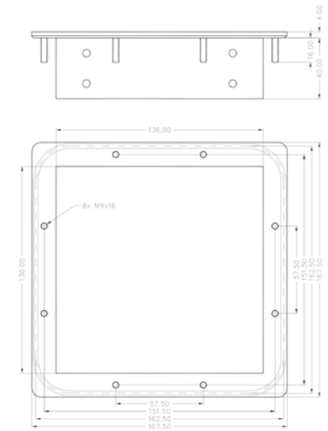

LOCON 24, 48 with front panel IP65

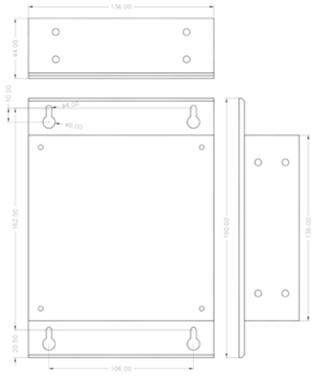

LOCON 24, 48 PM for mounting plate

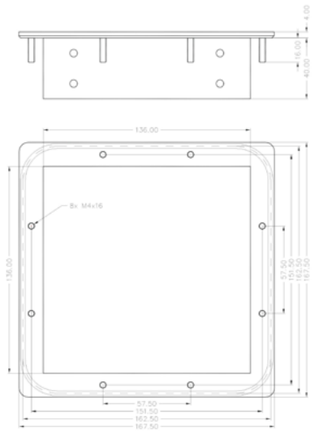

LOCON 24, 48 with front panel IP54

Structure of the order code

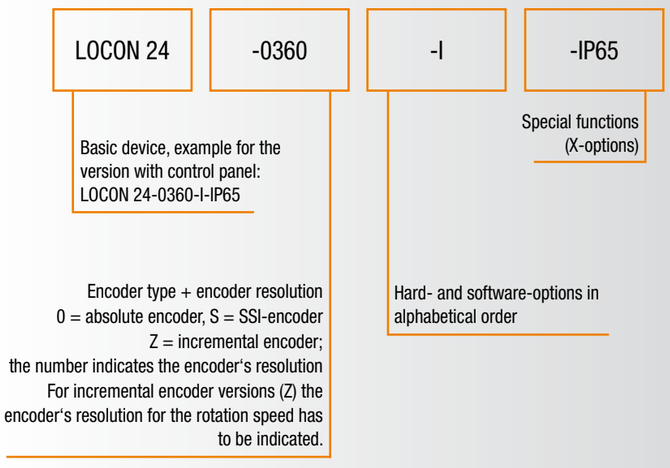

Deutschmann
your ticket to all buses

Basic device

Option	Meaning	Excludes or only possible with the option	L24	L48
PM	Version for mounting plate without keypad		❷	❷
0360	Version for absolute encoder parallel 360 inf./rev.	All other resolutions	•	•
01000	Version for absolute encoder parallel 1000 inf./rev.	All other resolutions	❷	•
0n	Version for absolute encoder parallel (n=encoder's resolution)	All other resolutions	•	•
S4096	Version for SSI-absolute encoder 4096 inf./ rev.	All other resolutions	•	•
S8192	Version for SSI-absolute encoder 8192 inf./ rev.	All other resolutions	•	•
MT	Version for SSI-absolute encoder 24 Bit (16 mio.)	All other resolutions	•	•
Zn	Version for incremental encoder 24V signal voltage (n=indicates encoder's resolution at speed indication): counting range in increments		16384	8192

Hard- and software-options

Code	Meaning	Excludes or only possible with the option	L24	L48
A32	Extension to 32 outputs		■	-
D	Binary coded speed indication on the 8 upper outputs		■	■
G	Encoder monitoring (for postively counting adjusted devices only)		■	■
H08	Highly dynamic idle time compensation on the first 8 outputs, all other outputs can be compensated bit by bit	Not with L, LT	■	■
I	Bitwise idle time compensation	Not with L, LT	•	•
IP65	Front plate; version IP65		■	■
L	Blockwise idle time compensation	Not with I, LT	x	x
LT	Blockwise idle time compensation with separate turn on and turn off time	Not with I, L	■	■
N	Extension to 1500 data records		■	■
U	Direction cams		■	■
T	Timer/programmable switch		x	x
Vn	Locked outputs		■	■
W16/W32	Angle/time cams on the first 16/32 outputs possible (restriction: encoder resolution max. 13 Bit)		■	■
X?	Customized version	On request	■	■

• = Standard
■ = Optionally for an additional charge
X = Optionally at no additional charge
❶ = RS232/485 switchable on board
❷ = The unit is alternatively available with or without integrated control panel

Technical data LOCON 24 and LOCON 48

	Characteristics	LOCON 24	LOCON 24PM	LOCON 48	LOCON 48PM
Available versions	- with integrated keypad - without integrated keypad	● -	- ●	● -	- ●
Installation	- front panel installation - mounting plate - DINrail	● ● without front -	- ● without front -	● ● without front -	- ● without front -
Output		24 ■ 32	24 ■ 32	48 -	48 -
Storable programs		64	64	64	64
Data records (incl.output) (number of switch-on/switch-off points)		1000 ■ 1500	1000 ■ 1500	1000 ■ 1500	1000 ■ 1500
Actual value acquisition	- incremental encoder - counting range incremental - absolute encoder Gray excess - absolute encoder parallel Gray code to bit number - absolute encoder SSI Gray code (at option MT) - count/direction inputs for incremental encoders - timer function (value is generated internally)	16384 360, 720, 1000, 3600, 7200 2...13 2...13, (24) ☒ 1-65535 ms	16384 360, 720, 1000, 3600, 7200 2...13 2...13, (24) ☒ 1-65535 ms	8192 360, 720, 1000, 3600, 7200 2...13 2...13, (24) ☒ 1-65535 ms	8192 360, 720, 1000, 3600, 7200 2...13 2...13, (24) ☒ 1-65535 ms
Idle time compensation (dynamic cam)	- blockwise - bitwise - separate I/O - entering the idle time in steps - partial idle time compensation - highly dynamic ITC for number of outputs	x ● ■ 1ms - 999ms - ■ 8	x ● ■ 1ms - 999ms - ■ 8	x ● ■ 1ms - 999ms - ■ 8	x ● ■ 1ms - 999ms - ■ 8
Cycle time In some configurations the cycle time may be higher, in case of using the high-speed version it may also be lower.	- without idle time compensation (ITC) - with blockwise ITC - with bitwise ITC - with blockwise I/O ITC	75µs 150µs 300µs 250µs	75µs 150µs 300µs 250µs	100µs 200µs 500µs 400µs	100µs 200µs 500µs 400µs
Software characteristics: zero point offset cams are interchangeable linewise angle/time cams direction cams lockable outputs scalable encoder value	- within the complete range	● ● ■ 16/32 outputs ■ ■ ●	● ● ■ 16/32 outputs ■ ■ ●	● ● ■ 16/32 outputs ■ ■ ●	● ● ■ 16/32 ouputs ■ ■ ●
Run-control-function		● (relay)	● (relay)	● (relay)	● (relay)
Speed indicator		●	●	●	●
Input	- for encoder signal - for program selection - for program change - for program release	13 6 1 1	13 6 1 1	13 6 1 1	13 6 1 1
Programming	- teach-in programming - via integrated keypad - via Deutschmann terminal - via PC (WINLOC 32®-software) - via cam control profile	● ● ● ● ●	● - ● ● ●	● ● ● ● ●	● - ● ● ●
Data backup	- EEPROM (min. 100 years) - via transfer program on PC	● ●	● ●	● ●	● ●
Display seven-segment indication	 - for position - for speed	10 digits ● ●	- - -	10 digits ● ●	- - -

	Characteristics	LOCON 24	LOCON 24PM	LOCON 48	LOCON 48PM
Status display for	- outputs - programming status - external program selection - SSI-control - error-display - run-control	● ● ● ● ● ●	● ● ● ● ● ●	● ● ● ● ● ●	● ● ● ● ● ●
Interface	- RS232 - RS485-DICNET®	● switchable ● switchable	● switchable ● switchable	● switchable ● switchable	● switchable ● switchable
Voltage supple 24VDC +/-20%		●	●	●	●
Max. power consumption (without load)		200mA	200mA	200mA	200mA
Output driver max. load	- 300 mA per output, max. 1A for 8 outputs at a time at 25°C ambient temperature - 700 mA per output, temporarily also 1A per output - outputs positive switching, short-circuit-roof	● ■ 8/16 outputs ●	● ■ 8/16 outputs ●	● ■ 8/16 outputs ●	● ■ 8/16 outputs ●
Dimensions basic device in mm	- width - height - depth	144 144 44	144 144 44	144 144 44	144 144 44
Front panel cutout		138 x 138	-	138 x 138	-
Protecttion class		IP20 [1] IP54 [2] ■ IP65 [3]	IP20 [1] - -	IP20 [1] IP54 [2] ■ IP65 [3]	IP20 [1] - -
Weight in grams		1000	1000	1000	1000

● = Standard
■ = Optionally for an additional charge
x = Optionally for no additional charge
☒ = Freely configurable
[1] = Without housing
[2] = Standard version for front panel installation
[3] = Version for front panel installation IP64

LOCON 200

Fast and modular

LOCON 200 consists of a basic unit with the tasks of the central actual-value acquisition, communication with the periphery, voltage supply and some further administration topics.
The complete performance capacity is achieved by using the expansion module with 8 I/Os each. Through the consistent arrangement as I/Os the basic module as well as the expansion unit achieve highest possible flexibility and best possible utilization of the hardware.
If, for instance only 8 externally selectable programs are required, the otherwise usually reserved pins are not useless but they can be used elsewhere.

The system is limited to one basic unit and max. 16 I/O-modules. Through the use of a separate processor for each module the cycle time in the overall system remains constant and depends upon configuration, encoder type, resolution as well as used software-performance characteristics. All modern actual value acquisition systems from incremental to multiturn encoder are supported. Alternatively the device can also be operated as program control unit (timer function). The time basis is generated internally and can be adjusted in the range from 1 to 65535 ms.

The connection to Fieldbus systems is as a matter of course as is the intuitive configuration via a PC-program. The alternative operation through an external terminal or the complete integration in the Fieldbuses come naturally with us. A version with integrated PROFIBUS DP or Modbus RTU is optionally available.

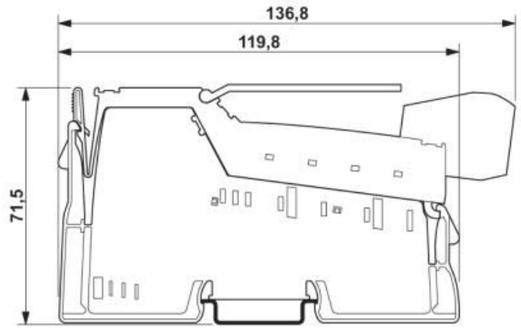

LOCON 200
Overall width 48.8 mm

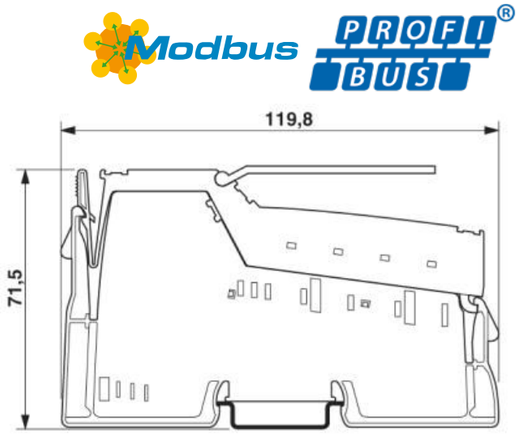

LOCON 200-I/O8 Expansion module
Overall width 12.2 mm

Expansion module I/O8

With this module LOCON 200 is expanded by 8 I/Os up to the maximum configuration level of 144 I/Os step by step. From a configuration level of more than 8 pieces LOCON 200, one NT module for LOCON 200-Out I/O8 must be used.

The expansion module contains its own processor. Therefore, the switching accuracy (cycle time) is independent of the LOCON 200(-PB)/(-MB) basic module or in other words: the configuration-dependent cycle time remains the same independent of the configuration level.

In the I/O8, the idle time can be configured in a module-related way. Besides, the device supports logic functions. That way logic connections can be realized in a module-related manner.

LOCON 100

Powerful and expandable

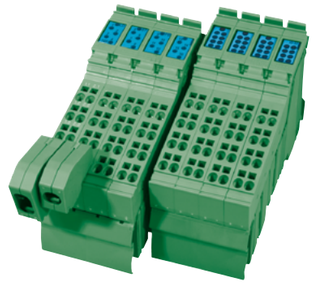

LOCON 100 consists of a basic unit with a total of 16 I/Os. They can be configured depending on the respective application. If, for instance, only a 9-bit encoder is required, then the other encoder connections must not remain useless but can be put to practical use for other applications.

The system can be expanded by one module to a total of 48 I/Os which are configured in the same way. So you can assemble your cam control individually and you are totally free regarding outputs, inputs and utilization of functions such as external program selection, encoder type and resolution etc.

LOCON 100 as well features connection facilities for all modern actual-value acquisition systems. Alternatively the device can also be operated as program control unit (timer function). The time basis is generated internally and can be adjusted in the range from 1 to 65535 ms. The software gives you the freedom to choose from various types of idle time compensation (dynamic cam). No matter whether angle-/angle-cams or angle-/time-cams are used - everything can be configured and combined.

The modern control-concept is convincing and offers something for all tastes: Modern PC GUI, that can be connected to any Fieldbus or the easy-tohandle terminal GUI. The device with integrated PROFIBUS DP or Modbus RTU is optionally available.

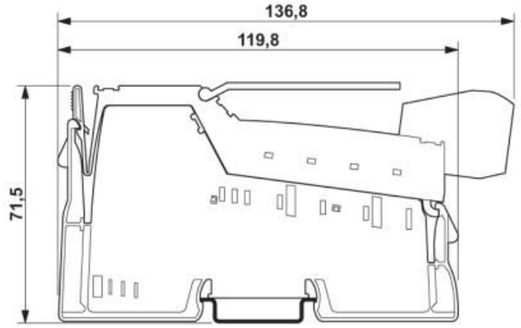

LOCON 100
Overall width 48.8 mm

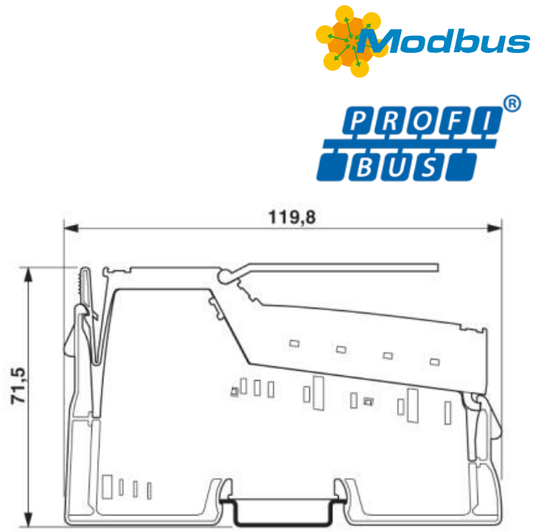

LOCON 100-A32 Expansion module
Overall width 48.8 mm

Expansion module A32

With this module the basic device LOCON 100(-PB)/(-MB) is expanded by 32 to a total of 48 I/Os. The expansion module does not contain an own processor. Therefore, the switching accuracy (cycle time) depends on the LOCON 100(-PB)/(-MB), its configuration and programmed data records.

LOCON 90

Powerful and reasonably priced

LOCON 90 is a less expensive version of LOCON 200 and LOCON 100. Equipped with 16 I/Os – of which a maximum of 8 can be configured as outputs – this unit is predestined for simple applications.
Absolute encoders can be connected via SSI up to a resolution of 13 bit. In case some of the I/Os are configured as inputs, these can e.g. be used as external program selection.

LOCON 90 as well features connection facilities for all modern actual-value acquisition systems. Alternatively the device can also be operated as program control unit (timer function). The time basis is generated internally and can be adjusted in the range from 1 to 65535 ms.
The software gives you the freedom to choose from various types of idle time compensation (dynamic cam). No matter whether angle-/angle-cams or angle-/timecams are used - everything can be configured and combined. LOCON 90 is operated via the PC-software WINLOC 32®.

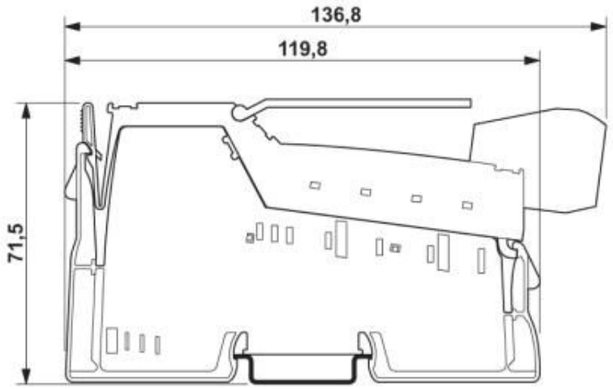

LOCON 90
Overall width 48.8 mm

Model Overview LOCON 90 / 100 / 200

Description	Explanation	Order number
LOCON 90		V3542
LOCON 100	Basis module	V3374
LOCON 100-MB	Basis module with Modbus RTU-interface	V3589
LOCON 100-PB	Basis module with PROFIBUS-interface	V3397
LOCON 100-A32	Expansion module with 32 I/Os for LOCON 100/100-PB	V3425
LOCON 200	Basis module	V3485
LOCON 200-MB	Basis module with Modbus RTU-interface	V4310
LOCON 200-PB	Basis module with PROFIBUS-interface	V3487
LOCON 200-Out I/O8	Expansion module with 8 I/Os for LOCON 200/200-PB	V3486
Logic	Logic function for LOCON 100-PB, LOCON 200, LOCON 200-PB	V3426
NT-Module	for LOCON 200-Out I/O8 power supply	V4082

Technical data LOCON 200

	Characteristics	LOCON 200	LOCON 200-MB	LOCON 200-PB	LOCON 200-I/O8
Available versions	without integrated keypad	●	●	●	●
Installation	DINrail mounting	●	●	●	●
Outputs		16 I/Os 144 (+16 x I/O8)	16 I/Os[1)] 112 (+14 x I/O8)	16 I/Os 80 (+8 x I/O8)	8 I/Os -
Storable programs		256	256	64	-
Data records (incl. ouput names) (number of switch-on/switch-off points)		1000 + 232 per module	808 + 232 pro Modul	1000	232
Actual value acquisition	- incremental encoder - counting range incremental - absolute encoder Gray excess - absolute encoder parallel Gray code to bit number - absolute encoder SSI Gray code - count/direction inputs for incremental encoders - timer function (value is generated internally)	8192 / 16 Mio. 360, 720, 1000, 3600, 7200 2...13 2...13, 24, 25 ☒ 1-65535 ms	8192 / 16 Mio. 360, 720, 1000, 3600, 7200 2...13 2...13, 24, 25 ☒ 1-65535 ms	8192 / 16 Mio. 360, 720, 1000, 3600, 7200 2...13 2...13, 24, 25 ☒ 1-65535 ms	dependent L200 (-PB)/(-MB) dependent L200 (-PB)/(-MB) dependent L200 (-PB)/(-MB) dependent L200 (-PB)/(-MB) dependent L200 (-PB)/(-MB) dependent L200 (-PB)/(-MB)
Idle time compensation (dynamic cam)	- blockwise - bitwise - separate I/O - entering the idle time in steps	☒ ● ☒ 0,2ms - 999ms	☒ ● ☒ 0,2ms - 999ms	☒ ● ☒ 0,2ms - 999ms	☒ ● ☒ 0,2ms - 999ms
Cycle time In some configurations the cycle time might be higher, in case of using the high-speed version it might also be lower.	- without idle time compensation (ITC) - with blockwise ITC - with bitwise ITC - with I/O ITC - high speed version for lower cycle time	dyn. from 500µs dyn. from 500µs dyn. from 500µs dyn. from 500µs ☒	dyn. ab 500 µs dyn. ab 500 µs dyn. ab 500 µs dyn. ab 500 µs	dyn. from 500µs dyn. from 500µs dyn. from 500µs dyn. from 500µs ☒	dyn. from 55µs dyn. from 65µs dyn. from 85µs dyn. from 115µs ☒
Software characteristics: zero point offset cams ar interchangeable linewise angle/time cams direction cams scalable encoder value	- within the complete range	● ● ☒ ☒ ☒	● ● ☒ ☒ ☒	● ● ☒ ☒ ☒	via basis L200 via basis L200 ☒ ☒ via basis L200
Run-control-function		☒	☒	☒	-
speed indicator		●	●	●	via basis L200
Inputs	- for encoder signal - for program selection - for program change - for program release	☒ 2...13 ☒ 1...8 ☒ 1 ☒ 1	☒ 2...13 ☒ 1...8 ☒ 1 ☒ 1	☒ 2...13 ☒ 1...8 ☒ 1 ☒ 1	- - - -
Logic functions	- logic inputs - extensive logic functions - shift register	■ 16 ● ●	- - -	■ 16 ● ●	■ 8 ● ●
Programming	- teach-in-programming - via Deutschmann terminal - via PC (WINLOC 32®-software) - via cam control profile - others	● ● ● ● -	● - ● ● Modbus-RTU	● ● ● ● PLC at connection	s. L200 (-PB)/(-MB) s. L200 s. L200 (-PB)/(-MB) s. L200 (-PB)/(-MB) s. L200 (-PB)/(-MB)
Data backup	- EEPROM (min. 100 years) - via transfer program on PC	● ●	● ●	● ●	● ●
Status display	- outputs - programming status - external program selection - SSI-control - error-display - run-control (if configured) - Fieldbus status	● - - - - - -	● - - - ● ● -	● - - - ● ● bus status	● - - - ● - -

[1)] These 16 I/Os can't be used as output.

	Characteristics	LOCON 200	LOCON 200-MB	LOCON 200-PB	LOCON 200-I/O8
Interface	- RS232 - RS485-DICNET® - RS232-Modbus - RS485-Modbus - integrated PROFIBUS-interface	● switchable ● switchable - - -	● switchable - ● switchable ● switchable -	● - - - ●	s. L200 (-PB)/(-MB) s. L200 (-PB)/(-MB) s. L200 (-PB)/(-MB) s. L200 (-PB)/(-MB) s. L200 (-PB)/(-MB)
Voltage supply 24VDC +/-20%		●	●	●	via basis L200
Max. power consumption (without load)		200mA	200mA	200mA	200mA
Output driver max. load	- 300 mA each output, max. 1A for 8 outputs each - 700 mA each output, temporarily also 1A each output - plus switching outputs, short circuit-proof	- ● ●	- ● ●	- ● ●	- ● ●
Analog outputs	- current output - voltage output	- -	- -	- -	- -
Dimensions **basic device in mm**	- width - height - depth	48,8 71,5 120	48,8 71,5 120	48,8 71,5 120	48,8 71,5 120
Protection class		IP20	IP20	IP20	IP20
Weight in grams		220	220	230	200

● = Standard
■ = Optionally for an additional charge
x = Optinally at no additional charge
☒ = Freely configurable

Technical data LOCON 100

	Characteristics	LOCON 100	LOCON 100-MB	LOCON 100-PB	LOCON 100-A32
Available versions	without integrated keypad	●	●	●	●
Installation	DINrail mounting	●	●	●	●
Outputs		16 I/Os 48 (with LOCON 100-A32)	16 I/Os 48 (with LOCON 100-A32)	16 I/Os (32 SW outputs) 48 (with LOCON 100-A32)	32 -
Storable programs		64	64	64	-
Data records (incl.output names) (number of switch-on/switch-off points)		1000	1000	1000	Data stored in L100 (-PB/-MB)
Actual value acquisition	- incremental encoder - counting range incremental - absolute encoder Gray excess - absolute encoder parallel Gray code to bit number - absolute encoder SSI Gray code - count/direction inputs for incremental encoders - timer function (value is generated internally)	8192/16 Mio. 360, 720, 1000, 3600, 7200 2...13 2...13, 24, 25 ☒ 1-65535 ms	8192/16 Mio. 360, 720, 1000, 3600, 7200 2...13 2...13, 24, 25 ☒ 1-65535 ms	8192/16 Mio. 360, 720, 1000, 3600, 7200 2...13 2...13, 24, 25 ☒ 1-65535 ms	dependent L100 (-PB/-MB) dependent L100 (-PB/-MB) dependent L100 (-PB/-MB) dependent L100 (-PB/-MB) dependent L100 (-PB/-MB) dependent L100 (-PB/-MB)
Idle time compensation (dynamic cam)	- blockwise - bitwise - separate I/O - entering the idle time in steps	☒ ● ☒ 0,2ms - 999ms	☒ ● ☒ 0,2ms - 999ms	☒ ● ☒ 0,2ms - 999ms	dependent L100 (-PB/-MB) dependent L100 (-PB/-MB) dependent L100 (-PB/-MB) via baisc L100
Cycle time In some configurations the cycle time might be higher, in case of using the high-speed version it might also be lower!	- without idle time compensation (ITC) - with blockwise ITC - with bitwise ITC - with I/O ITC - high speed version for lower cycle time	dyn. ab 100µs dyn. ab 130µs dyn. ab 165µs dyn. ab 190µs -	dyn. ab 140µs dyn. ab 170µs dyn. ab 205µs dyn. ab 230µs -	dyn. ab 250µs dyn. ab 280µs dyn. ab 315µs dyn. ab 340µs -	L100 + 50µ L100 + 50µ L100 + 50µ L100 + 50µ -
Software characteristics: zero point offset cams ar interchangeable linewise angle/time cams direction cams scalable encoder value	- within the complete range	● ● ☒ ☒ ☒	● ● ☒ ☒ ☒	● ● ☒ ☒ ☒	via basis L100 via basis L100 via basis L100 via basis L100 via basis L100
Run-control-function		☒	☒	☒	-
Speed indicator		●	●	●	via basis L100
Inputs	- for encoder signal - for program selection - for program change - for program release	☒ 2...13 ☒ 1...6 ☒ 1 ☒ 1	☒ 2...13 ☒ 1...6 ☒ 1 ☒ 1	☒ 2...13 ☒ 1...6 ☒ 1 ☒ 1	- - - -
Logic functions	- logic inputs - extensive logic functions - shift register	- - -	- - -	☒ ● ●	- - -
Programming	- teach-in-programming - via Deutschmann terminal - via PC (WINLOC 32®-software) - via cam control profile - others	● ● ● ● -	● - ● ● Modbus-RTU	● ● ● ● PLC at connection	- - - - s. L100 (-PB/-MB)
Data backup	- EEPROM (min. 100 years) - via transfer program on PC	● ●	● ●	● ●	s. L100 (-PB/-MB) s. L100 (-PB/-MB)
Status display for	- outputs - programming status - external program selection - SSI-control - error-display - run-control (if configured) - Fieldbus status	● - - - ● ● -	● - - - ● ● -	● - - - ● ● bus status	● - - - ● - -

	Characteristics	LOCON 100	LOCON 100-MB	LOCON 100-PB	LOCON 100-A32
Interface	- RS232 - RS485-DICNET® - RS232-Modbus - RS485-Modbus - integrated PROFIBUS-interface	● switchable ● switchable - - -	● switchable - ● switchable ● switchable -	● - - - ●	s. L100 (-PB/-MB) s. L100 (-PB/-MB) s. L100 (-PB/-MB) s. L100 (-PB/-MB) s. L100 (-PB/-MB)
Voltage supply 24VDC +/-20%		●	●	●	via basis L100
Max. power consumption (without load)		200mA	200mA	200mA	200mA
Output driver max. load	- 300 mA each output, max. 1A for 8 outputs each - 700 mA each output, temporarily also 1A each output - plus switching outputs, short circuit-proof	- ● ●	- ● ●	- ● ●	- ● ●
Analog outputs	- current outpout - voltage output	- -	- -	- -	- -
Dimensions basic device in mm	- width - height - depth	48,8 71,5 120	48,8 71,5 120	48,8 71,5 120	48,8 71,5 120
Protection class		IP20	IP20	IP20	IP20
Weight in grams		220	220	220	200

● = Standard
■ = Optionally for an additional charge
x = Optionally at no additional charge
☒ = Freely configurable

Technical data LOCON 90

	Characteristics	LOCON 90
Available versions	without integrated keypad	●
Installation	DINrail mounting	●
Outputs		8
Storable programs		64
Data records (incl. ouput names) (number of switch-on/switch-off points)		1000
Actual value acquisition	- incremental encoder - counting range incremental - absolute encoder Gray excess - absolute encoder parallel Gray code to bit number - absolute encoder SSI Gray code - count/direction inputs for incremental encoders - timer function (value is generated internally)	8192 / 16 Mio. 360, 720, 1000, 3600, 7200 2...13 2...13, 24, 25 ☒ 1-65535 ms
Idle time compensation (dynamic cam)	- blockwise - bitwise - separate I/O - entering the idle time in steps	☒ ● ☒ 0,2ms - 999ms
Cycle time In some configurations the cycle time might be higher, in case of using the high-speed version it might also be lower.	- without idle time compensation (ITC) - with blockwise ITC - with bitwise ITC - with I/O ITC - high speed version for lower cycle time	dyn. from 100µs dyn. from 130µs dyn. from 165µs dyn. from 190µs
Software characteristics: zero point offset cams ar interchangeable linewise angle/time cams direction cams scalable encoder value	- within the complete range	● ● ☒ ☒ ☒
Run-control-function		☒
speed indicator		●
Inputs	- for encoder signal - for program selection - for program change - for program release	- ☒ 1...6 ☒ 1 ☒ 1
Logic functions	- logic inputs - extensive logic functions - shift register	- - -
Programming	- teach-in-programming - via Deutschmann terminal - via PC (WINLOC 32®-software) - via cam control profile - others	● ● ● ● -
Data backup	- EEPROM (min. 100 years) - via transfer program on PC	● ●
Status display	- outputs - programming status - external program selection - SSI-control - error-display - run-control (if configured) - Fieldbus status	● - - - ● ● -
Interface	- RS232 - RS485-DICNET®	● -
Voltage supply 24VDC +/-20%		●
Max. power consumption (without load)		200mA
Output driver max. load	- 300 mA each output, max. 1A for 8 outputs each - 700 mA each output, temporarily also 1A each output - plus switching outputs, short circuit-proof	- ● ●
Analog outputs	- current output - voltage output	- -
Dimensions **basic device in mm**	- width - height - depth	12,2 71,5 120
Protection class		IP20
Weight in grams		70

Deutschmann
your ticket to all buses

● = Standard
■ = Optionally for an additional charge
x = Optinally at no additional charge
☒ = Freely configurable

ROTARNOCK series

With the ROTARNOCK-series Deutschmann Automation took a new innovative path. The entire cam control was integrated in the housing of the absolute encoder. This saves work and money. The wiring of the encoder can be dispensed with entirely. The outputs of the cam control are applied directly to the device via its connector.

The ROTARNOCK 100 is optionally available with integrated PROFIBUS- or PROFINET interface. The device versions with PROFIBUS or PROFINET can be connected to SIEMENS SIMATIC S7 and other PLCs and Soft-PLCs very easily. The data exchange between the PLC and the cam control is carried out via a data component. The data component for S7 can be generated by the user himself by means of the data component generator that is available free of charge. A data component in the version required in each case is generated by the data component generator, so that no unnecessary storage space is occupied in the PLC.

The device description files (GSD or GSDML) required for a PROFIBUS or PROFINET connection are also provided free of charge. With it no programming effort is involved for the user and he does not have to carry out changes in the PLC-program. For the initial programming the comfortable PC-software WINLOC 32® can be used and the already fixed data component including cams, idle times etc. can be generated automatically.

Version	Overall length in mm (dimension x)
ROTARNOCK 100 standard D-Sub version	69
ROTARNOCK 100 with Option IF	69
ROTARNOCK 100 PROFIBUS with D-Sub connector	81
ROTARNOCK 100 PROFIBUS in IP65 and ROTARNOCK 100 Fieldbus version in IP65 ROTARNOCK 100 PROFINET	98

ROTARNOCK 100

Complete equipment for all applications

In this high-end model the advantages of the most recent Deutschmann software package have been implemented. This provides you with free software configuration. The switching outputs have a load rating of 700 mA and cut additional costs in the switch cabinet. After all the ROTARNOCK-series is already economical by nature:
The wiring effort is reduced since no additional rotary encoder needs to be wired up.
The ROTARNOCK 100 PROFIBUS-version unfolds its cost advantages more than ever.

The ROTARNOCK-versions are equipped for various industrial requirements. The versions you can choose from are IP54 version with D-SUB connector or IP65 version with round connector.

ROTARNOCK 100 with integrated Fieldbus

The ROTARNOCK 100 is also available with Fieldbuses and Industrial Ethernet buses. Such as:

CANopen · DeviceNet · EtherCAT · EtherNet/IP · ETHERNET TCP/IP · Modbus · MPI · PROFIBUS · PROFINET

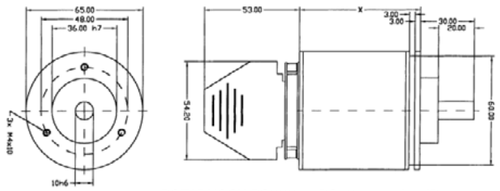

ROTARNOCK RS232 or RS485, version IP54

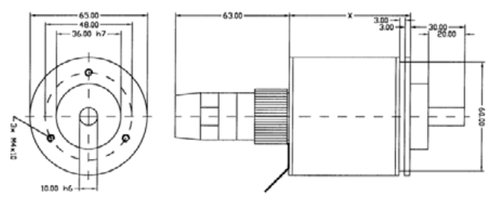

ROTARNOCK RS232 or RS485, version IP65

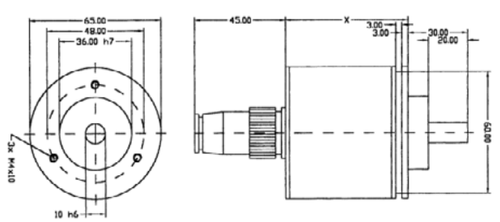

ROTARNOCK 100 with integrated PROFIBUS protection class IP65 and
ROTARNOCK 100 with integrated Fieldbus protection class IP65

ROTARNOCK Starterkit

This starter kit contains all required cables and power supplies for the quick laboratory setup. Packages with other ROTARNOCK versions are available on request.

Article description	Order.-No.
Starterkit for ROTARNOCK 100 with RS232-interface	P1084
Starterkit für ROTARNOCK 100 mit PROFIBUS-Schnittstelle	P1066
Starterkit für ROTARNOCK 100 mit RS485-DICNET® Schnittstelle	P1068

Basis device

Code	Meaning	Explanation
TN65-4096-100	ROTARNOCK 100, 4096 inf./rev., 16 switching outputs	Resolution freely configurable

Hard- and Software options

Code	Meaning	Excludes option or only possible with option	R100
D	Position-/speed indicator switchover; switchover depending on the speed		●
G	Encoder monitoring		☒
I	Bitwise idle time compensation	Not with L, LT, IT	●
IF	28-pole round connector for protection class IP65	Not with PB and IP	■
IP	Version IP65 for versions with integrated PROFIBUS	Not with devices without PROFIBUS or with IF	■
	Version IP65 for versions with integrated Fieldbus	Not with devices without Fieldbus or with IF	■
IT	Separate switch-on /switch-off idle time compensation bitwise	Not with I, L, LT	☒
L	Blockwise idle time compensation	Not with I, LT, IT	☒
LT	Separate switch-on /switch-off idle time compensation blockwise	Not with I, L, IT	☒
R	RUN-CONTROL-function on output 16; for the Fieldbus-version with IP65 only to output 12		☒
U	Output change depending on the direction of rotation		☒
232	Interface RS232	Not with option 485	x
485	Interface RS485 DICNET® (cross-linking of up to 16 DA cam controls)	Not with option 232 or other Fieldbus	x
PB	Integrated Profibus-interface (additional RS232-interface)	Not with option 485 or other Fieldbus	■
CO	Integrated CANopen-interface (additional RS232-interface)	Not with option 485 or other Fieldbus	■
DN	Integrated DeviceNet-interface (additional RS232-interface	Not with option 485 or other Fieldbus	■
EC	Integrated EtherCAT-interface (additional RS232-interface)	Not with option 485 or other Fieldbus	■
EI	Integrated Ethernet/IP-interface (additional RS232-interface)	Not with option 485 or other Fieldbus	■
FE	Integrated Ethernet 10/100 MBit-interface (Modbus TCP or Ethernet TCP/IP) (additional RS232-interface)	Not with option 485 or other Fieldbus	■
MPI	Integrated MPI-interface (additional RS232-interface)	Not with option 485 or other Fieldbus	■
PN	Integrated Profinet-interface (additional RS232-interface)	Not with option 485 or other Fieldbus	■

R100 = ROTARNOCK 100 ● = Standard ■ = Optionally for an additional charge x = Optionally at no additional charge
☒= Freely configurable

LOGIC	The Logic-license code can be ordered by indicating the serial number	für ROTARNOCK 100 erhältlich	Art.-No. V3426

Structure of the order code

T – Clamping flange
N – Cam Control
65 – Housing diameter
-4096 – Resolution (per revolution)
-100 – Basic version of the device (example here: ROTARNOCK 100)
-I485 – Software options in alphabetical order Interfaces or Fieldbus at the end
-E – Shaft diameter E = 10 mm
-N – Hardware options: N= zero- and error-LED (standard) IF = round plug 28-pin. complete devices IP = IP65-version for Fieldbus-variant

Technical data ROTARNOCK 100

	Characteristics	ROTARNOCK 100	ROTARNOCK 100 PB	ROTARNOCK 100 PN	ROTARNOCK 100 FB*
Mechanical data	- shaft load -shaft diameter - shaft length - shock resistance - vibration resistancet - rotor's moment of inertia - durability	axial 40 N, radial 110 N 10 mm 20 mm = 200 m/s² (12 ms) = 100 m/s² (10 Hz…1000 Hz)˜ ~30 gcm² > 105 h at 1000 min⁻¹	axial 40 N, radial 110 N 10 mm 20 mm = 200 m/s² (12 ms) = 100 m/s² (10 Hz…1000 Hz)˜ ~30 gcm² > 105 h at 1000 min⁻¹	axial 40 N, radial 110 N 10 mm 20 mm = 200 m/s² (12 ms) = 100 m/s² (10 Hz…1000 Hz)˜ ~30 gcm² > 105 h at 1000 min⁻¹	axial 40 N, radial 110 N 10 mm 20 mm = 200 m/s² (12 ms) = 100 m/s² (10 Hz…1000 Hz)˜ ~30 gcm² > 105 h at 1000 min⁻¹
Outputs		16	16 + 32 software outputs or 12-48 at IP65	12 + 32 software outputs	12 + 32 software outputs
Storable programs		64	64	64	64
Data records number of switch-on/ switch-off points)		1000	1000	1000	1000
Actual value acquisition	- Absolutwertgeber gek. Gray-Code - Absolutwertgeber Parallel Gray-Code bis Bitzahl	360, 1000, 3600 9...12	360, 1000, 3600 9...12	360, 1000, 3600 9...12	360, 1000, 3600 9...12
Idle time compensation (dynamic cam)	- blockwise - bitwise - separate I/O - entering the idle time in steps	☒ ● ☒ 1ms - 999ms	☒ ● ☒ 1ms - 999ms	☒ ● ☒ 1ms - 999ms	☒ ● ☒ 1ms - 999ms
Cycle time In some configurations the cycle time may be higher.	- without idle time compensation (ITC) - with blockwise ITC - with bitwise ITC - with I/O ITC	ca. 110µs ca. 145µs ca. 225µs ca. 270µs	ca. 260µs ca. 295µs ca. 425µs ca. 430µs	- - - -	- - - -
Software characteristics: zero offset cams movable track by track angle/time cams direction cams	- within the complete range	● ● ☒ ☒	● ● ☒ ☒	● ● ☒ ☒	● ● ☒ ☒
Run-control-funktion		☒	☒	☒	☒
Speed indicator		●	●	●	●
Inputs	- for program selection - for program change	4 1	via Fieldbus only via Fieldbus only	via Fieldbus only via Fieldbus only	via Fieldbus only via Fieldbus only
Logic function	- logic inputs - extensive logic functions - shift register	- ■ ■	16 via Fieldbus ■ ■	16 via Fieldbus ■ ■	16 via Fieldbus ■ ■
Programming	- teach-in programming - via integrated keypad - via Deutschmann terminal - via PC (WINLOC 32®-software) - via cam control profile - integrated Fieldbus and any desired visualization system	via Fieldbus only - ● ● ● -	via Fieldbus only - - - ● PROFIBUS	via Fieldbus only - - - ● PROFINET	via Fieldbus only - - - ● Feldbus
Data protection	- EEPROM (min. 100 years) - via transfer program on PC	● ●	- -	- -	- -
LED for	- error-display - zero indication - Fieldbus status	● ● -	● ● ●	● ● ●	● ● ●
Supply voltage 24VDC +/-20%		●	●	●	●
Max. current consumption (without load)		150mA	200mA	200mA	200mA
Output driver **max. load**	- 300 mA je Ausgang, max. 1A für je 8 Ausgänge - 700 mA je Ausgang, kurzzeitig auch 1A je Ausgang - Ausgänge plusschaltend, kurzschlussfest	- ● ●	- ● ●	- ● ●	- ● ●
Dimensions **Basic device in mm**	- Durchmesser - Länge	65 siehe Zeichnung	65 siehe Zeichnung	65 siehe Zeichnung	65 see drawing
Protection class		IP54 ■ IP65	IP54 ■ IP65	IP65	IP65
Weight in grams		400	400	480	480

● = Standard ■ = Optionally for an additional charge x = Optionally at no additionally charge ☒= Freely configurable
PB = PROFIBUS PN = PROFINET *FB = Available with integrated Fieldbus

CANopen DeviceNet EtherCAT EtherNet/IP ETHERNET TCP/IP Modbus MPI PROFIBUS PROFINET

Deutschmann
your ticket to all buses

TERM 6 and TERM 24

TERM 6 - The small ones

The “four-key operation” which has proven its worth over the years in countless applications can be operated easily after a short familiarization-period only. A clear structure and practical symbols on the seven-segment display, in conjunction with the function LEDs, made this interface very popular. The integrated and switchable interfaces RS232- and RS485-DICNET® allow the communication with any Deutschmann cam control. In addition to the version for front-panel installation, a version for DIN rail mounting and a portable version for the service technician is also available.

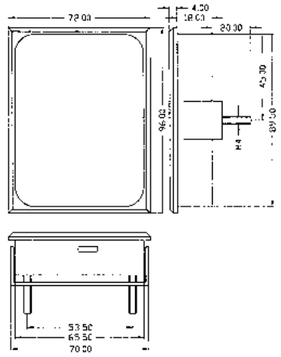

Term 6 for front panel installation

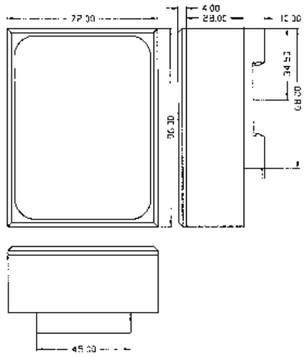

Term 6 H for DIN rail mounting

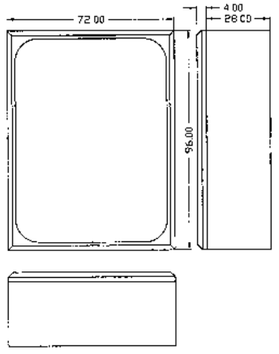

Term 6 T hand-held terminal

TERM 24 - The compact ones

This multi-lingual menu driven user-interface in connection with the decimal keypad and the function keys offers a high level of convenience. Encoder position and speed are displayed simultaneously on the seven-segment display. Depending on the kind of application, you can choose between the housing versions IP54 and IP65. This terminal can be used with any Deutschmann cam control thanks to the RS232- or RS485-DICNET®-interface.

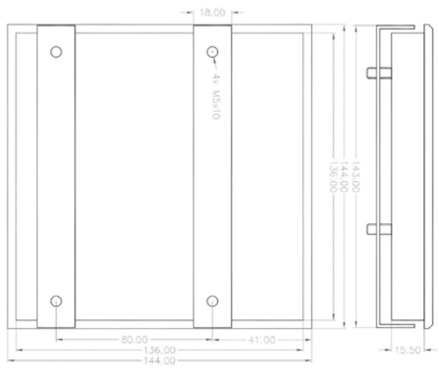

Term24, front panel IP54

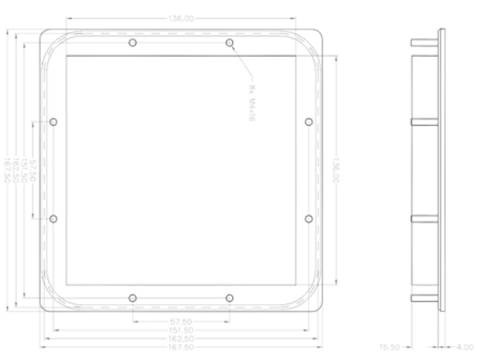

Term 24, front panel IP65

Compatibility of Deutschmann cam controls with terminals and the WINLOC® 32-software

The integrated front panel of a LOCON 24, 48 or 64 can also be used as terminal, provided that several devices are connected with one another. With it the compatibility as for TERM 24 applies.

Device type	TERM 6	TERM 24	WINLOC® 32 PC-tool
LOCON 16	●	●	●
LOCON 17	●	●	●
LOCON 24	●	●	●
LOCON 48	●	●	●
LOCON 90	●	●	●
LOCON 100	●	●	●
LOCON 100-MB	-	-	●
LOCON 100-PB	-	-	●
LOCON 200	●	●	●
LOCON 200-MB	-	-	●
LOCON 200-PB	-	-	●
ROTARNOCK 100	●	●	●
ROTARNOCK 100-PB	-	-	●
ROTARNOCK 100 with integrated Fieldbus*	-	-	●
ROTARNOCK 100-PN	-	-	●

● = possible

*

CANopen · DeviceNet · EtherCAT · EtherNet/IP · ETHERNET TCP/IP · Modbus · MPI · PROFIBUS · PROFINET

Device type	TERM 6	TERM 24-IP54	TERM 24-IP65
Features	display and control unit	display and control unit	display and control unit
Display	8-digit 7-segment display for position/speed, output indication for 16 outputs	10-digit 7-segment display for position/ speed, output indication for 48 outputs	10-digit 7-segment display for position/ speed, output indication for 48 outputs
Interface	RS232 (V.24) and RS485-DICNET®, max. any 3 terminals in one bus, interface switchable	RS232 (V.24) or RS485-DICNET®, max. any 3 terminals in one bus, interface not switchable	RS232 (V.24) or RS485-DICNET®, max. any 3 terminals in one bus, interface not switchable
LCD-display	-	2-line LCD-display with LED-backlight, 16 characters/line, operator guidance in ten languages	2-line LCD-display with LED-backlight, 16 characters/line, operator guidance in ten languages
Connections	screw-plug-connector	screw-plug-connector	screw-plug-connector
Function LEDs	6 status LEDs	-	-
Installation	front panel installation, DIN rail mounting, portable version	front panel installation	front panel installation
Protection class	IP54	IP54	IP65
Dimensions (W x H xD)	72 x 96 x 18 mm, 72 x 96 x 25 (DIN rail version)	144 x x144 x 15 mm	168 x 168 x 15 mm
Weight	approx. 200 g	approx. 450 g	approx. 450 g
Panel cut-out	66 x 90 mm	138 + 1 x 138 + 1 mm	138 + 1 x 138 + 1 mm

WINLOC 32®

Programming Deutschmann cam controls using Windows

WINLOC 32® offers an easy to use graphical user interface for programming Deutschmann cam controls under Microsoft Windows 7.

The user may print all device data as complete documentation. The compilation of the data is made by the user. The printout is prepared as a scaleable preview, which can be observed before it is printed on paper.

With the basic version WINLOC 32® already offers all necessary abilities for programming devices as well as for transferring data from Deutschmann cam controls to the PC.

By simply entering a license number the basic version is upgrated to a comfort version with an interface that is easier to use and an extended printout capability. WINLOC 32® is available as German or English language version.

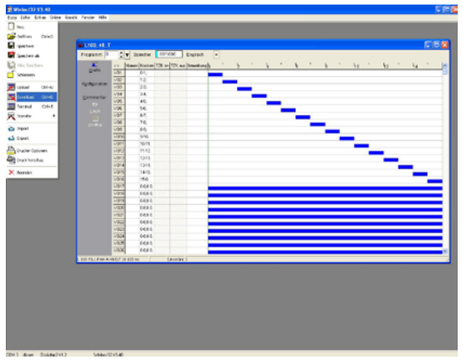

Basic or comfort version?

The software WINLOC 32®, that has been developed for the programming of all Deutschmann cam controls is available in two versions. The basic version can be ordered directly from us or it is also available for download free of charge from our website at www.deutschmann.de. It offers all functions that are required to program Deutschmann cam controls.

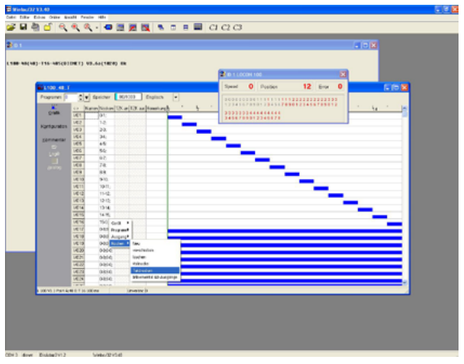

There is also a comfort version of WINLOC 32® available. By entering a license number that can be ordered from Deutschmann you can use additional convenient tools in the software, that simplify the operation of the program.

The following tools can be used:

The toolbar: It contains buttons that simplify the handling of the program.

Extented print options: Deviating from the standard presetting this tool allows an individual setting so that the printout complies with your requests.

Selecting devices at upload/download: The availability of Pull-Down Menus simplifies the selection of devices, that exist in the network.

Data migration function: If you want to transfer data from one cam control to another, this is automatically carried out by this function.

Online-presentation: This function is very important for devices that are supplied without a terminal. The settings of your cam control, such as position, speed, outputs are being visualized.

Teach-In: This function simplifies the initialization of your device, since the electronic zero-point can be set by simply pressing the Teach-In button. With it a manual setting is dropped.

Comparison function: The comparison of 2 cam controls is possible by opening two windows with the respective settings of your cam controls.

If you want to use the convenient tools of the comfort version order your license number at Deutschmann Automation directly at www.deutschmann.de or by phone: +49 (0) 6434-9433-0.

Deutschmann
your ticket to all buses

Function	Basic version	Comfort version
Programming general, cams, logic, names, idle times, analog values	●	●
Graphical display of the programming	●	●
Diagnostic option of the communication channels (DICNET®)	●	●
Complete support of all configuration parameters	●	●
Context-sensitive help German/English	●	●
DA cam control error list	●	●
Color adjustments	●	●
Different communication interfaces for all Deutschmann cam controls with RS232 or DICNET® connection	●	●
Simplified operation of the program	-	●
Terminal window	●	●
Toolbars	-	●
Context-sensitive mouse menu	-	●
Extended print adjustment	-	●
Comfortable selection of the devices during upload/download	-	●
Flexible print with extended adjustment possibilities	-	●
Data transfer function	-	●
Online display position, speed outputs	-	●
"Teach-In" zero offset	-	●
Comparison function – two cam controls can be compared in two windows	-	●
Generating a data component	-	●

DB generator

PC-software data component generator

In a simple manner the program makes it possible to generate an AWL source file. Due to the clear arrangement of the component options they can be entered fast and easily. By means of these settings the program generates the AWL source file. Based on a configuration file the program receives information on parameters and the size of this component. While the program starts this file is read. It is also possible to read this file again later.

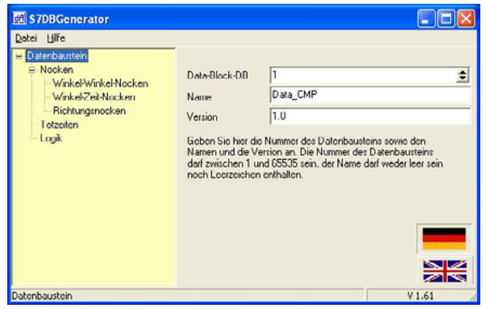

Generating the S7® program code – fast and easy

After the program is started, you can navigate through the setting options by means of the survey on the left side. On the individual parameter cards you can set the parameter values, such as number of cams to be used as well as the cam type.

Generating the component through WINLOC 32® elegantly

If the data component generator is started from the WINLOC 32®-software, then the data, created in WINLOC 32® (cams, programs, idle times, etc.) will automatically be assigned to the data component. By means of the corresponding settings in the DB generator's window it is also possible to create "reserves" for programs, cams, idle times etc. that are to be recorded later.

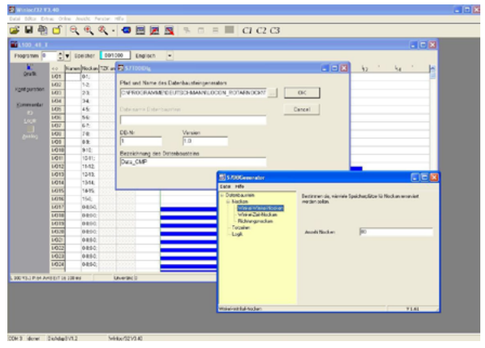

Rotary encoder

Absolute encoders, singleturn - SA58/TA58 utilising integrative technology

Essential advantages:
- Schock resistance >2500 m/s², 6 ms nach DIN IEC 68-2-27
- 2 years warranty
- Better EMC-behaviour compared to conventional encoders

General order code for encoders

Order reference:

X A 5 8 - X X X X - G X X - X - X

Series
S = Synchro flange
T = Clamping flange

Resolution
0360, 1000, 1024, 4096, 8192

Code type
G = Gray

Interface and supply voltage
Y = Push-Pull 10 - 30V (absolute parallel)
S = SSI 10 - 30V

Shaft
E = Shaft 10 mm with T-flange (clamping flange)
C = Shaft 6 mm with S-flange (synchro flange)

Connection
ID = 16-pole round plug axial (parallel)
IDR = 16-pole round plug radial (parallel)
IE = 12-pole round plug axial (SSI)
IER = 12-pole round plug radial (SSI)

Options
Z = Supply voltage 5V
(protection class IP65)

For the detailed order codes please take a look at the corresponding encoders.

Deutschmann
your ticket to all buses

Absolute encoder, singleturn - Shaft version SSI

- Up to a resolution of 13 bit, singleturn in intergrative technology*
- Shaft Ø 6 mm or 10 mm
- SSI-interface
- Gehäuse Ø 58 mm
- Max. IP66
- Electronic temperature- and ageing compensation
- Short-circuit proof outputs

*Integration of all components because of an innovative assembly priciple and the use of an opto-asic on one printed circuit board only, at a resolution of up to 13 bit.

Mechanical characteristics	
Housing diameter	58 mm
Shaft diameter	S: 6 mm / C: 10 mm
Flange types (housing fastening)	Clamping flange / synchro flange
Protection class shaft input verified according to EN60529	IP66
Protection class housing verified according to EN60529	IP65
Shaft load axial	S: 20 N, C: 40 N
Shaft load radial	S: 80 N, C: 110 N
Max. number of revolutions (temporarily)	12000 rev./min.
Max. number of revolutions (permanent operation)	3000 rev./min.
Starting torque	5 Ncm
Moment of inertia	30 kgm²
Vibration resistance (DIN EN 60068-2-6)	10 m/s² (10...100 Hz)
Shock resistance (DIN EN 60068-2-27)	100 m/s² (6 ms)
Continuous shock resistance (DIN EN 60028-2-29)	10 m/s² (16ms)
Operating temperature	-40 ... +85°C
Storage temperature	-40 ... +85°C
Weight	200 g

Electrical characteristics	
Supply voltage	10 - 30 VDC
Power consumption max.	100 mA (without load)
Pulse frequency.	70 mA (without load)
Step frequency	100...2000 kHz
Step frequency	200 kHz
Resolution	See table on the next page
Output code	See table on the next page
Linearity	+/-0,5 LSB
Outputs	RS422 SSI
Output current max.	20 mA / each channel
Output current typ.	-
Short-circuit proof output?	Yes
Output level high	-0,9 VxUb
Output level low	0,5 V
Electrical lifetime	100000 h
Turn-on time	1 s

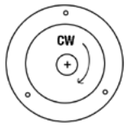

Sense of rotation

- Rising code values in case of a clockwise turn of the shaft (cw), falling values in case of a counter-clockwise turn (ccw) with a view to the shaft.

Oder number	Article designation	Resolution	Output code	Shaft	Flange
V2606	TA58-4096-GSE-IE	4096	Gray	10 mm	Clamping flange
V2608	SA58-4096-GSC-IER	4096	Gray	6 mm	Synchro flange
V2609	TA58-1024-GSE-IE	1024	Gray	10 mm	Clamping flange
V2610	TA58-4096-GSE-IER	4096	Gray	10 mm	Clamping flange
V2611	TA58-8192-GSE-IE	8192	Gray	10 mm	Clamping flange

Order code

X A 5 8 - X X X X - G S X - X

Series
S = Synchro flange
T = Clamping flange

Resolution
1024, 4096, 8192

Code type
G = Gray

Interface and supply voltage
S = SSI 10 - 30V

Shaft
E = Shaft 10 mm with T-flange (clamping flange)
C = Shaft 6 mm with S-flange (synchro flange)

Connection
IE = 12-pole round plug axial (SSI)
IER = 12-pole round plug radial (SSI)

View of the mating face pin contact: SSI - 12-pole connector

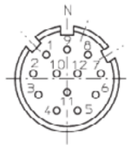

Pin assignment SSI with 12-pole connector

Pin	1	2	3	4	5	6	7	8	9	10	11	12	PH[1]
Signal	0 V	+UB	+T	-T	+D	-D	---	complement	---	---	---	---	shield
Colour	blue	red	yellow	green	white	brown		n.c.					

[1] PH = Shield is applied to the connector's housing
Outputs that are not used have to be isolated before startup.

The assignment of the colours is exlclusively valid for cables produced by Deutschmann Automation.
For prefabricated cables, please refer to the price list.

Deutschmann
your ticket to all buses

Drawings

Shaft version type XA58-xxxx-GSX-X-X

Clamping flange

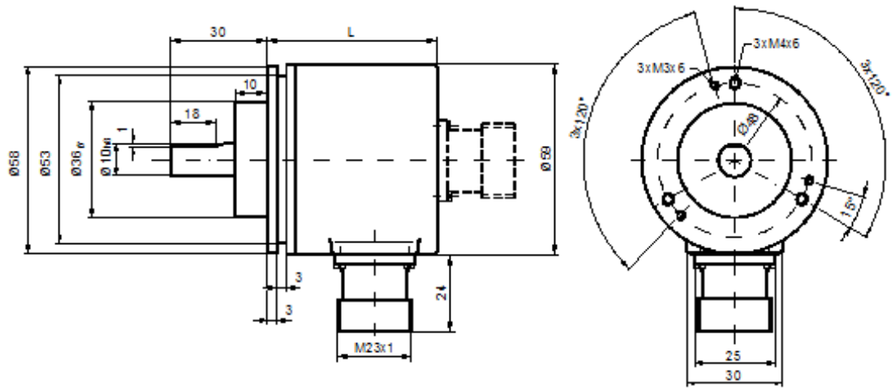

Clamping flange	L axial/radial
Version C10	53

Snychro flange

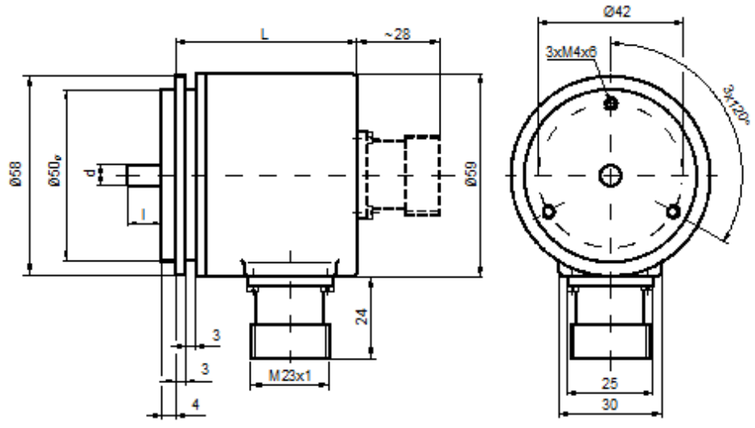

Synchro flange	d / mm	l / mm	L axial/radial
Version S06	6_{16}	10	53

Absolute encoders, singleturn - Shaft version parallel

- Up to a resolution of 13 bit in integrative technology*
- Parallel interface
- Housing Ø 58 mm
- Shaft Ø 6 mm or 10 mm
- Max. IP67
- Electronic temperature and ageing compensation
- Short-circuit proof outputs

*Integration of all components because of an innovative assembly priciple and the use of an opto-asic on one printed circuit board only, at a resolution of up to 13 bit.

Mechanical characteristics		
	Resolution: all except for 1000	Resolution: 1000
Housing diameter	58 mm	58 mm
Shaft diameter	S06: 6 mm / C10: 10 mm	10 mm
Flange types (housing fastening)	Clamping flange / Synchro flange	Clamping flange
Protection class shaft input verified according to EN60529	IP67	IP66
Protection class housing verified according to EN60529	IP67	IP65
Shaft load axial	40 N	40 N
Shaft load radial	60 N	110 N
Max. number of revolutions (temporarily)	12000 rev./min.	12000 rev./min.
Max. number of revolutions (permanent operation)	10000 rev./min.	3000 rev./min.
Starting torque	0,01 Ncm	5 Ncm
Moment of inertia	3,8 x 10^{-6} kgm²	30 kgm²
Vibration resistance (DIN EN 60068-2-6)	100 m/s² (10...2000 Hz)	10 m/s² (10...100 Hz)
Shock resistance (DIN EN 60068-2-27)	1000 m/s² (6 ms)	100 m/s² (6 ms)
Continuous shock resistance (DIN EN 60028-2-29)	1000 m/s² (16ms)	10 m/s² (16ms)
Operating temperature	-40 ... +100°C	-40 ... +85°C
Storage temperature	-40 ... +100°C	-40 ... +85°C
Weight	350 g	200 g

Electrical characteristics		
	Resolution: all except for 1000	Resolution: 1000
Supply voltage	10 - 30 VDC	10 - 30 VDC
Current consumption max.	200 mA	100 mA (ohne Last)
Current consumption typ.	130 mA	70 mA (ohne Last)
Pulse frequency	500 kHz	100...2000 kHz
Step frequency	1000 kHz	200 kHz
Resolution	See table on the next page	1000
Output code	Gray, Gray Excess (see table on the next page)	Gray Excess
Linearity	+/-0,5 LSB	+/-0,5 LSB
Outputs	Push Pull	Push Pull
Output current max.	30 mA / each channel	20 mA / each channel
Output current typ.	10 mA / each channel	-
Short-circuit proof output?	Yes	Yes
Output level high	≥ Ub-2,2 V (30 mA)	-0,9 VxUb
Output level low	≤ 1,6 V (30 mA)	0,5 V
Electrical lifetime	100000 h	100000 h
Turn-on time	0,1 s	1 s

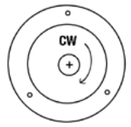

Sense of rotation

- Rising code values in case of a clockwise turn of the shaft (cw), falling values in case of a counter-clockwise turn (ccw) with a view to the shaft.

Order number	Article designation	Resolution	Output code	Shaft	Flange
V2600	TA58-0360-GYE-ID	360 steps	Gray Excess	10 mm	Clamping flange
V2401	TA58-1000-GYE-ID	1000 steps	Gray Excess	10 mm	Clamping flange
V2602	TA58-1024-GYE-ID	1024 steps or 10 Bit	Gray	10 mm	Clamping flange
V2603	TA58-4096-GYE-ID	4096 steps or 12 Bit	Gray	10 mm	Clamping flange
V2605	TA58-0360-GYE-IDR	360 steps	Gray Excess	10 mm	Clamping flange
V2606	TA58-1000-GYE-IDR	1000 steps	Gray Excess	10 mm	Clamping flange
V2613	TA58-4096-GYE-IDR	4096 steps or 12 Bit	Gray	10 mm	Clamping flange
V2614	SA58-0360-GYC-ID	360 steps	Gray Excess	6 mm	Clamping flange
V2615	SA58-0360-GYC-IDR	360 steps	Gray Excess	6 mm	Clamping flange
V2618	SA58-4096-GYC-IDR	4096 steps or 12 Bit	Gray	6 mm	Clamping flange

Order code

X A 5 8 - X X X X - G Y X - X - X

Series
S = Synchro flange
T = Clamping flange

Resolution
0360, 1000, 1024, 4096, 8192

Code type
G = Gray (& Gray Excess)

Interface and supply voltage
Y = Push-Pull 10 - 30V (absolute parallel)

Options
Z = Supply voltage 5V (protection class IP65)

Connection
ID = 16-pole round plug axial (parallel)
IDR = 16-pole round plug radial (parallel)

Shaft
E = Shaft 10 mm with T-flange (clamping flange)
C = Shaft 6 mm with S-flange (synchro flange)

View of the mating face pin contact: 16-pole connector

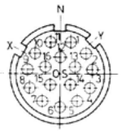

Pin assignment with 16-pole connector

Pin	1	2	3	4	5	6	7	8	9	10	11	12	13	14	15	16	PH[1)]
Signal	2^0 = 1	2^1 = 2	2^2 = 4	2^3 = 8	2^4 = 16	2^5 = 32	2^6 = 64	2^7 = 128	2^8 = 256	2^9 = 512	2^{10} = 1024	2^{11} = 2048	---	complement	+UB	0 Volt	
Colour	white	brown	green	yellow	gray	pink	purple	gray/ pink	white/ green	brown/ green	white/ yellow	yellow/ brown	n.c.	n.c.	red	blue + black	

[1)] PH = Connector housing
Unused outputs have to be isolated prior to commissioning.

The colour assignment is exclusively valid for cables produced by Deutschmann Automation.
For prefabricated cables, please refer to the price list.

Drawings

Shaft version type XA58-xxxx-GYE-X-X (except for resolution of 1000)

Klemmflansch / M23-Stecker / axial/radial

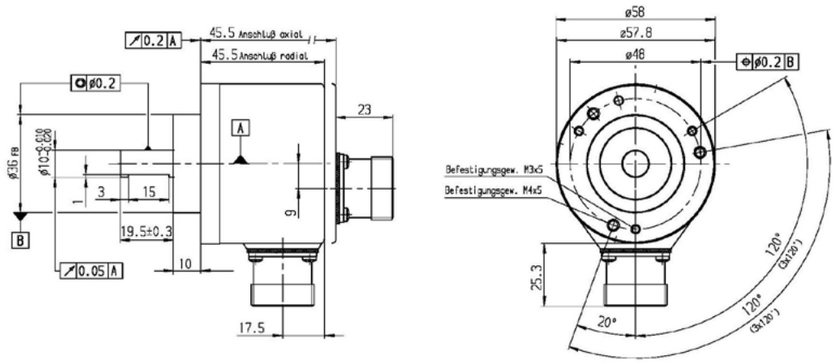

Synchroflansch / M23-Stecker / axial/radial

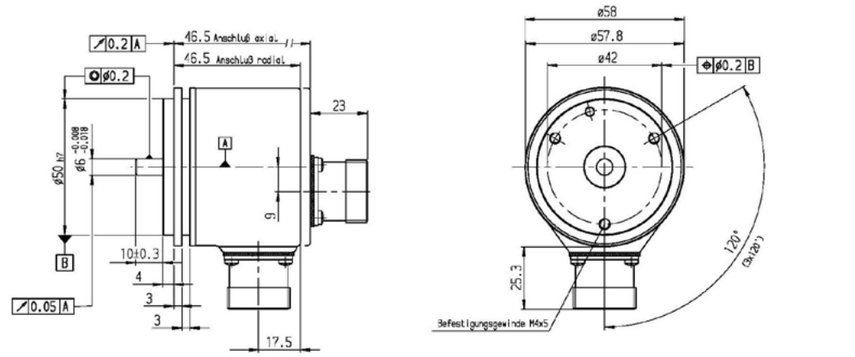

Shaft version type TA58-1000-GYE-X

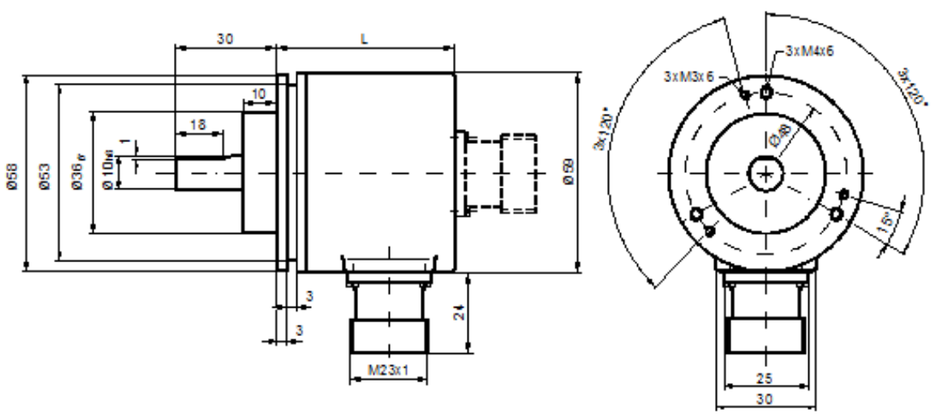

Clamping flange	L axial/radial
Version C10	53

Dynamic switching accelerator SPEEDY

Switching on and off magnetic controlled connect elements lead to delays that consist of two components:

- Delay time for setting up and removing the magnetic field
- Delay time for overcoming mechanical inertia

To reduce this delay time SPEEDY makes it possible to achieve an overexcitation of the magnetic field by an overvoltage pulse of 100 V, adjustable from 1 ms to 10 ms and with it to overcome the mechanical inertia much faster. When switching off, the delay time for the removal of the magnetic field is also reduced considerably due to a negative free-wheeling voltage.

The status of the inputs and outputs as well as of the supply voltages are displayed via integrated LEDs. SPEEDY has different switching modes available that can be adjusted from the outside. Following please find a more detailed description:

The switching modes of SPEEDY

Setting the switching modes

The switching modes described below are selected through a rotary code switch. The following assignment applies here:

Please note, that every change of the inputs is directly evaluated in the first 8 switch positions. This mode makes sense if the inputs are connected with the outputs of a control and a distortion-free reaction from SPEEDY is required.

In case the interference suppression is on, the input signals are being filtered, that results in a delay (runtime input -> output) of approx. 1 ms.

This operating mode makes sense if the inputs are being switched by a relay or if very strong failures are on the input lines.

Rotary switch indication	Switching mode	Input interference suppression
0	1	Off
1	2	Off
2	3	Off
3	4	Off
4	5 (1ms)	Off
5	5 (2 ms)	Off
6	5 (5 ms)	Off
7	5 (10 ms)	Off
8	1	Active
9	2	Active
A	3	Active
B	4	Active
C	5 (1 ms)	Active
D	5 (2 ms)	Active
E	5 (5 ms)	Active
F	5 (10 ms)	Active

Switching mode 1

In switching mode 1 the input 1 is wired to the output 1 and the input 2 is wired to the output 2. The duration of the overexcitation pulse is set at the inputs 3 and 4.

Input 3	Input 4	Pulse
0 VDC	0 VDC	1 ms
+24 VDC	0 VDC	2 ms
0 VDC	+24 VDC	5 ms
+24 VDC	+24 VDC	10 ms

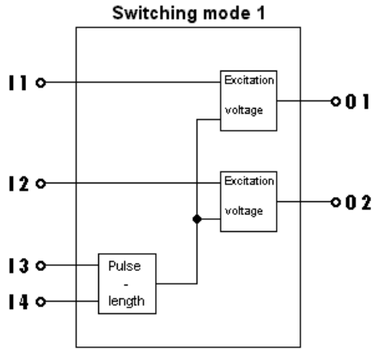

Switching mode 2

In switching mode 2 the input 1 is wired to the output 1 and the input 2 is wired to the output 2. Input 3 is an enabling input. The inputs 1 and 2 are ineffective without a signal at input 3. The duration of the overexcitation pulse is set at input 4.

Input 1	Input 2	Input 3	Output 1	Output 2
0 VDC	0 VDC	0 VDC	0 VDC	0 VDC
+24 VDC	0 VDC	0 VDC	0 VDC	0 VDC
0 VDC	+24 VDC	0 VDC	0 VDC	0 VDC
+24 VDC	+24 VDC	0 VDC	0 VDC	0 VDC
0 VDC	0 VDC	+24 VDC	0 VDC	0 VDC
+24 VDC	0 VDC	+24 VDC	+24 VDC	0 VDC
0	+24 VDC	+24 VDC	0 VDC	+24 VDC
+24 VDC	+24 VDC	+24 VDC	+24 VDC	+24 VDC

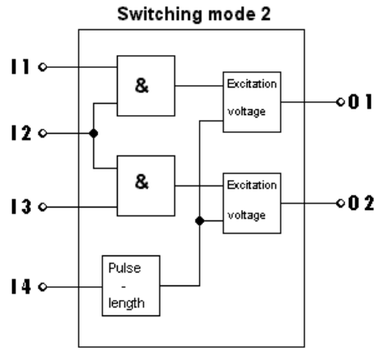

Input 4	Pulse
0 VDC	2ms
+24 VDC	5ms

Switching mode 3

The switching mode 3 was especially developed for double magnet coils (-driving elements). Output 2 is wired if the input 1 does not have a signal. In case input 1 receives a signal, then output 2 is switched off first, followed by a pause**. Then the output 1 is switched on. If the signal is removed from input 1 it happens the other way round. The output 1 is switched off first, followed by a pause**. Only then the output 2 is switched on again. Input 2 determines the duration of the pause**. The duration of the overexcitation pulse is set at the inputs 3 and 4.

Input 1	Output 1	Output 2
0 VDC	0 VDC	+24 VDC
+24 VDC	+24 VDC	0 VDC

Input 2	Pause**
0 VDC	Pulse x 2
+24 VDC	Pulse x 1

**Pause: Period between switching off the magnet coil 1 and switching on the magnet coil 2 or the other way round. It results from the overexcitation time (pulse) multiplied by 2 or 1.

Input 3	Input 4	Pulse
0 VDC	0 VDC	1ms
+24 VDC	0 VDC	2ms
0 VDC	+24 VDC	5ms
+24 VDC	+24 VDC	10ms

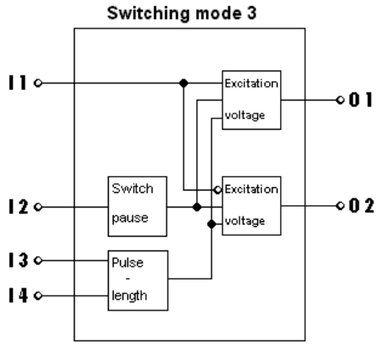

Switching mode 4

The switching mode 4 includes an RS-flip-flop logic (-RESET/SET logic). If input 2 (-RESET) is supplied with 24 V after switch-on, then output 2 is wired. If input 1 (SET) is also supplied with 24 V, then output 1 is wired and output 2 is is switched off. If the signal at input 1 (SET) disappears, then this state at the outputs remains stable. Provided that the signal at the input 2 (-RESET) is taken away now (0 VDC), then the output 1 is switched off and the output 2 is switched on. This switching state also remains stable if the input 2 receives a signal (+24 VDC) again. The input 2 (-RESET) has a higher priority compared to input 1 (SET); which means: if input 1 has a signal (+24 VDC) and input 2 does not have a signal (0 VDC), then output 2 is wired and output 1 is switched off. The duration of the overexcitation pulse is set at the inputs 3 and 4 (clamps 3 and 4).

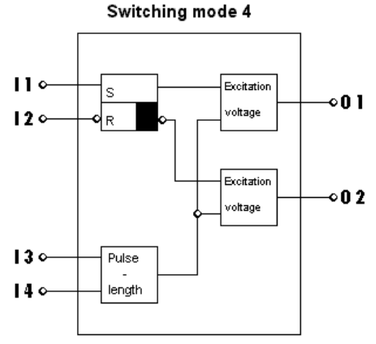

Input 1	Input 2	Output 1	Output 2
0 VDC	0 VDC	0 VDC	+24 VDC
+24 VDC	0 VDC	0 VDC	+24 VDC
0 VDC	+24 VDC	unchanged	unchanged
+24 VDC	+24 VDC	+24 VDC	0 VDC

Eingang 3	Eingang 4	Impuls
0 VDC	0 VDC	1ms
+24 VDC	0 VDC	2ms
0 VDC	+24 VDC	5ms
+24 VDC	+24 VDC	10ms

Switching mode 5

The switching mode 5 also includes an RS-flip-flop, that is set via the inputs 1 and 2 and that is reset via the inputs 3 and 4 (compare description in switching mode 4).The pulse length is set through the rotary code switch. The following assignment applies for it:

Rotary switch display	Pulse
4 oder C	1 ms
5 oder D	2 ms
6 oder E	5 ms
7 oder F	10 ms

Input 1	Input 2	Input 3	Input 4	Output 1	Output 2
0 VDC	0 VDC	0 VDC	0 VDC	unchanged	unchanged
+24 VDC	0 VDC	0 VDC	0 VDC	unchanged	unchanged
0 VDC	+24 VDC	0 VDC	0 VDC	unchanged	unchanged
+24 VDC	+24 VDC	0 VDC	0 VDC	+24 VDC	0 VDC
0 VDC	0 VDC	+24 VDC	0 VDC	0 VDC	+24 VDC
+24 VDC	0 VDC	+24 VDC	0 VDC	0 VDC	+24 VDC
0 VDC	+24 VDC	+24 VDC	0 VDC	0 VDC	+24 VDC
+24 VDC	+24 VDC	+24 VDC	0 VDC	0 VDC	+24 VDC
0 VDC	0 VDC	0 VDC	+24 VDC	unchanged	unchanged
+24 VDC	0 VDC	0 VDC	+24 VDC	unchanged	unchanged
0 VDC	+24 VDC	0 VDC	+24 VDC	unchanged	unchanged
+24 VDC	+24 VDC	0 VDC	+24 VDC	+24 VDC	+24 VDC
0 VDC	0 VDC	+24 VDC	+24 VDC	unchanged	unchanged
+24 VDC	0 VDC	+24 VDC	+24 VDC	unchanged	unchanged
0 VDC	+24 VDC	+24 VDC	+24 VDC	unchanged	unchanged
+24 VDC	+24 VDC	+24 VDC	+24 VDC	+24 VDC	0 VDC
0 VDC	+24 VDC	+24 VDC	+24 VDC	unchanged	unchanged
+24 VDC	+24 VDC	+24 VDC	+24 VDC	+24 VDC	0 VDC

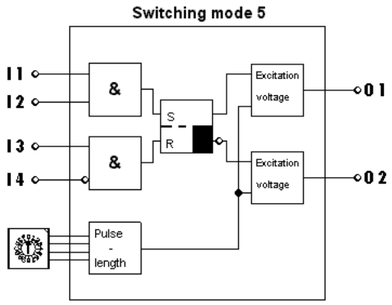

Technical data		
	SPEEDY 1A	SPEEDY 4A
Supply voltage	10...30 VDC, max. 1 W (no load)	10...30 VDC, max. 1 W (no load)
Current consumption	Max. 40mA (idle state), Max. 3A (in the moment of switching)	Max. 40mA (idle state), Max. 3A (in the moment of switching)
Inputs	4 Ri > 3,9K* UL = 0V - 3V, UH = 12V - 30V	4 Ri > 3,9K* UL = 0V - 3V, UH = 12V - 30V
Outputs	2 I_{out} < 1A continuous load U_{out}-stat > supply voltage - 1V U_{out}-pulse = 88V .. 100V or 44V .. 50V	2 I_{out} < 4A continuous load / 5A short-time (max. 1min.) U_{out}-stat > supply voltage - 1V U_{out}-pulse = 88V .. 100V or 44V .. 50V
Programs	5 adjustable via rotary switch, more customized programs on request	5 adjustable via rotary switch, more customized programs on request
Pulse length	Adjustable 1 - 10ms	Adjustable 1 - 10ms
Switching delay	< 300µs (without input interference suppression)	< 300µs (without input interference suppression)
Recovery time	Max. 150ms at 1A-load and 10ms-pulse	max. 150ms bei 1A-Last und 10ms-Impuls
Housing	Plastic for EN-rail mounting (stackable) W x H x D: 25 x 79 x 90.5mm	Plastic for EN-rail mounting (stackable) W x H x D: 25 x 79 x 90.5mm
Conductor connection	Via plug-in terminal block up to 2.5 mm²	Via plug-in terminal block up to 2.5 mm²
Display	LED-status display of the inputs, outputs and supply voltage	LED-status display of the inputs, outputs and supply voltage

Order number	Article designation	
V3104	DSB SPEEDY-50V-1A	with 1A switching capacity
V1526	DSB SPEEDY-100V-1A	
V3105	DSB SPEEDY-50V-4A	with 4A switching capacity
V2313	DSB SPEEDY-100V-4A	

Accessories for cam controls and encoders

	Designation	Order no.
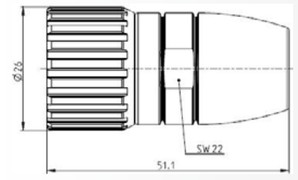	12-pole cable connector with union nut EMC-version, protection class IP67, traction relief inside, socket, counterclockwise, for the use with SSI-encoders	V1706
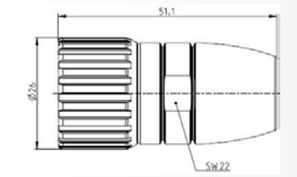	16-pole cable connector with union nut EMC-version, protection class IP67, socket, standard version, for the use with encoders parallel-output or ROTARNOCK Fieldbus version	V1700
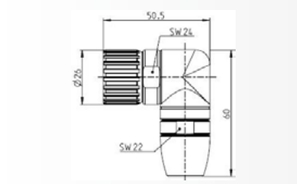	16-pole cable connector with union nut EMC-version, protection class IP67, socket, angled, for the use with encoders parallel-output or ROTARNOCK Fiedbus version	V2756
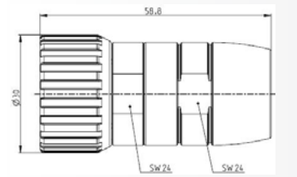	28-pole cable connector with union nut EMC-version, protection class IP67, traction relief inside, large cable inlet, socket, standard version, for the use with ROTARNOCK devices IP65	V1703
	5-pole connector M12, socket, inverse coding, PROFIBUS/MPI input connector for ROTARNOCK	V3059E
	5-pole connector M12, pin, inverse coding, PROFIBUS/MPI output connector for ROTARNOCK	V3059A
	4-pole cable connector M12, pin, D-coding, PROFINET for ROTARNOCK	V4123
	Angle for mounting encoders with clamping flange (T-flange) and ROTARNOCK devices	V1480
	Adapter flange for clamping for the use of encoders without groove	V1709
	USB-RS232 converter 20 cm, tested with all Deutschmann software tools	V3654
	DICNET®-adapter for the connection from cam controls with RS485-DICNET®-interface to the COM-interface at the PC.	V2156

Designation	Order-No
Assembly tool for round plugs	V1705
Round plug 12pol. Socket	V1706
Round plug 16pol. Socket	V1700
Round plug 16pol. socket, bent	V2756
Round plug 16pol. socket with PG-screwing	V2903
Round plug 28pol. Socket	V1703
5pol. cable connector M12, pin, b-coding, Profibus output connector	V3059A
5pol. cable connector M12, socket, b-coding, Profibus input connector	V3059E
4pol. cable connector M12, pin, d-coding for Profinet	V4123
Phoenix plug socket for LOCON 16/17 (strip 1 – 16)	V2988
Phoenix plug socket for LOCON 16/17 (strip 17 – 32)	V2989
Phoenix plug 5pol. Socket	V1630
Mounting clamp for LOCON 16/17, LOCON 24/48 (1 set = 2 pieces (set price))	V1344
Mounting angle for T-flange	V1480
Clamping flange adapter	V1709
Coupling 10:10	V1358
DICNET-Adapter DICADAP 3	V2156
Cable 2x2x0,22m² for DICNET (price per meter)	V1544
WINLOC single user license comfort version	V2336
USB-RS232 Converter with 20 cm-cable	V3654
Power supply PA500 for ROTARNOCK-Starter Kit	V3666

Mass-produced cables

Mass cable encoder xA58-xxxx-GYE-xx (absolute encoder parallel)			
Order-No.	**Available lengths in meters (xx)**	**Article designation**	**Explanation**
V2105-xx	5; 10; 15; 25	K-EP-01-R16B-xx-00	For encoders parallel up to 12 bit, cable type 16 x 0,14 mm2, 16-pole round plug socket, length xx m, other end open
V2106-xx	5; 10; 15; 25	K-EP-01-R16B-xx-AE	For encoders parallel up to 12 bit, cable type 16 x 0,14 mm2, 16-pole round plug socket, length xx m, other end wire end sleeves
V2107-xx	0,2; 5; 10; 15; 25	K-EP-01-R16B-xx-D25S	For encoder parallel up to 12 Bit, cable type 16x0,14mm², 16pol. round plug socket, length xx m, other side 25pol. D-SUB-pin with metal coated cover

Connection cable encoder xA58-xxxx-GSE-xx (absolute encoder SSI)			
Order-No.	**Available lengths in meters (xx)**	**Article designation**	**Explanation**
V2382-xx	5; 10; 15; 25	K-ES-08-R12B-xx-AE-12	For encoder serial up to 12 bit, bus cable 4x2x0,25, 12pol. round plug socket, length xx m, other side wire-end sleeves, according to connection table 12
V2810-xx	5; 10; 15; 25	K-ES-08-R12B-xx-00-12	For encoder serial up to 12 bit, bus cable 4x2x0,25, 12pol. round plug socket, length xx m, other side open, according to connection table 12

Connection cable ROTARNOCK (TN65-xxxx…)			
Order-No.	**Available lengths in meters (xx)**	**Article designation**	**Explanation**
V2123-xx	5; 10; 15; 25	K-NR-07-D25B-xx-00	For ROTARNOCK, cable type 20 x 2 x 0,14 mm2, 25-pole D-SUB socket with metalized hood, length xx m, other end open
V2183-xx	5; 10; 15; 25	K-NR-07-R28B-xx-AE	For ROTARNOCK, cable type 20x2x0,14mm², 28pol. round plug socket, length xx m, other side wire end sleeves
V2222-xx	5; 10; 15; 25	K-NR-07-R28B-xx-00	For ROTARNOCK, cable type 20x2x0,14mm², 28pol. round plug socket, length xx m, other side open
V3951-xx	5; 10; 15; 25	K-N2-03-R16B-xx-00	For serial connection RS232, cable type 16 x 0,34mm², 16pol. round plug socket, length xx m, other side open

Deutschmann
your ticket to all buses

Connection cable LOCON (for serial connection RS232)		
Order-No.	**Article designation**	**Explanation**
V2097-02	K-N2-05-D9B-02-AE	For serial connection RS232, cable type 3x0,34mm², 9pol. D-SUB-socket with metal coated cover, length 2m, other side wire end sleeves
V2140-02	K-N2-05-D9S-02-D9B	For serial connection RS232, cable type 3x0,34mm², 9pol. D-SUB-pin with metal coated cover, length 2m, 9pol. D-SUB-socket with metal coated cover Note: For LOCON 24/48/64 only

Programming cable ROTARNOCK (TN65-xxxx…)		
Order-No.	**Article designation**	**Explanation**
V3467	Programming cable for ROTARNOCK - 232/PB	Programming cable for ROTARNOCK - 232/PB, 2,0 m inclusive 24V power supply, side A: 9pol. D-SUB socket with metal coated cover, side B: 25pol. D-SUB socket with metal coated cover + 2pol. screw-/plug connector
V3480	Programming cable for ROTARNOCK (DICNET)	Programming cable for ROTARNOCK (Dicnet), 2,0 m inclusive 24V power supply, side A: 25pol. D-SUB socket with metal coated cover, side B: 25pol. D-SUB socket with metal coated cover + 2pol. screw-/plug connector + Dicnet-adapter
V3483	Programming cable for ROTARNOCK (DICNET) IP65	Programming cable for ROTARNOCK (Dicnet) IP65, 2,0 m, inclusive 24V power supply, side A: 25pol. D-SUB socket, side B: 28pol. roundplug + 2pol. screw-/plug connector + Dicnet-adapter
V3655	Programming cable for ROTARNOCK - PB/PN IP65	Programming cable for ROTARNOCK - PB/PN IP65, 2,0 m inclusive 24V power supply, side A: 9pol. D-SUB socket with metal coated cover, side B: 16pol. round plug socket + 2pol. screw-/plug connector
V3712	Programming cable for ROTARNOCK IFN - 232/PB	Programming cable for ROTARNOCK IFN - 232, length 2,0 m, inclusive 24V power supply, side A: 9pol. D-SUB socket with metal coated cover, side B: 28pol. round plug socket + 2pol. screw-/plug connector

Proramming cable LOCON 90/100/200		
Order-No.	**Article designation**	**Explanation**
V3964	Mass-produced configuration and programming cable-232 for LOCON 90/100/200	Mass-produced configuration and programming cable-232. Length 2,0 m, side A: 9pol. D-SUB socket with metal coated cover, side B: 8pol. screw-/plug connector with universal power supply 12W, 24V, 0,5A Note: The USB-RS232 Adapter, 20 cm, (article number: V3654) has to be ordered separately.

Glossary

Dynamic cam / idle time compensation

The idle time compensation is the time that passes from setting a cam control output until the actual reaction of the connected device (e. g. opening a valve). Normally this idle time is constant. For a dynamic compensation of this idle time a cam control has to shift a programmed cam depending on the actual encoder speed, that means a valve that is supposed to be opened on position 100, for example must be opened at 1 m/s on position 95, at 2 m/s it must already be opened on position 90.

This function is called dynamic cam shifting or idle time compensation (ITC). Idle times can be programmed blockwise, which means a set idle time always applies to a block of 8 outputs or bitwise. For an idle time compensation with separate turn-on/ turn-off time it is possible to select different turnon and turn-off delay times.

DICNET®

DICNET® (Deutschmann-Industry-Controller-Net) is a multi-master Fieldbus. At the physical layer according to the ISO-OSI shift model it corresponds to the DIN 19254, part 1. That means a connection between all participants in the net is established with an RS485-two-wire line.

The physical arrangement is thus a bus system, at which the participants can be switched on and off as desired. At the maximum expansion stage 16 cam controls, 16 display units, 3 operation terminals and 1 PC can be connected at the same time. From the logical point of view it is a token ring, that means that always only the participant who has the access authorization (token) is allowed to send to the bus. In case he does not have any data for another participants, then he passes on the token to that neighbour, who was determined during a configuration phase.

Through this principle a deterministic bus cycle time is achieved, which means the time (worst-case) until a data packet can be sent is exactly calculable. In case a participant is turned on or off an automatic reconfiguration is made. The transmission baud rate is 312.5 kbaud at a length of 11 bit/byte. A maximum of 127 participants can be operated on one bus, whereas data packets with a maximum of 14 byte per cycle are being transmitted. An automatic check of the received information takes place as well as an error report in case of a twofold transmission error. The maximum expansion of the net must not exceed 500 m.

Temperature ranges and humidity

All Deutschmann cam controls are specified for a storage temperature of -25°C to +70°C. The operating temperature without forced convection ranges from 0°C to +45°C, with forced convection from 0°C to +65°C. The maximum relative humidity can be 80%, non-condensing, in a non-corrosive atmosphere.

Shock and vibration

All our devices are tested for the following values:
Shock 15G/11 milliseconds I vibration 0.15mm/10..50 Hz, G/50..150 Hertz

Fieldbus connection

Basically all Deutschmann devices can be connected via a Gateway to the Fieldbuses common on the world market. Some types can also be supplied with integrated Fieldbus-interface.

Angle-/time-cams

In most applications the switch-on and switch-off points (cam) are set position-dependent. For certain applications, however, it is necessary that the switch-on point is set position-dependent and the switch-off point time-dependent. For devices with this function the time base may vary in the range from 1 millisecond to 32500 milliseconds.

Direction cam

The switch-on and switch-off points (cam) are normally switched regardless of the rotational direction. Through the function direction cam it is possible to define whether the a cam is to be activated in clockwise rotation or anti-clockwise rotation only or as it is the normal case in both directions.

Logic functions / shift register

Applications in which the cam control takes over PLC-tasks. Up to 16 inputs/outputs, markers and a shiftregister can be logically linked. With it simple PLC-task are passed on to the cam control. Advantage: faster cycle times, PLC does not have to carry out any peripheral work. The shift register can for instance be used for an easy sorting of good and bad end products (e. g. at bottling).

Encoder monitoring

Functions for the complete monitoring of encoder and cable. Every time the encoder is read in it is compared to the one before. In case of a deviation of +/-3 inc. an error message is shown. Additionally at the absolute encoders with a resolution of 360 or 1000 inf./rev. (Gray excess) an error message is shown at the undefined codes.

Lockable outputs

The function serves to lock machine-relevant outputs and only permit the change of product-relevant outputs.

Global availability

The company

Deutschmann Automation, a german company based in Bad Camberg is working in the automation technology since 1976 and became known with cam controls in the 1980s.

In 1989 Deutschmann Automation started operating in the fi eldbus technology. The development of one's first own bus system DICNET was an essential step. Since 1996 different fieldbus and Industrial Ethernet products are offered under the brand name UNIGATE®.

Thanks to a competent quality management and continuous enhancement Deutschmann became one of the leading suppliers in the automation industry. The entire development and manufacturing takes place in Germany.

We offer workshops for our All-In-One Bus nodes of the UNIGATE® IC series and the Software tool Protocol Developer. In these workshops you will learn everything you need to know about our products and how you can easily realize your projects with Deutschmann.

For all products the necessary documents and tools can be found, free of cost, on www.deutschmann.com. Furthermore on the Deutschmann Technology Wiki, wiki.deutschmann.de, technological information is easily accessible for our customers and users, cross-linking application know-how and ensuring that the information is up to date.

Our experts in development, sales and support have the right solution for your demands.

Deutschmann
your ticket to all buses

UNIGATE® CL

- Protocol Converter for all devices with a serial interface

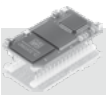

UNIGATE® IC

- Easy integration into your own electronics

UNIGATE® CX

- Making incompatible networks compatible

Subject to technical changes. We do not accept liability doe any misprints or errors.

Deutschmann Automation GmbH & Co. KG
Carl-Zeiss-Straße 8
65520 Bad Camberg | Germany
Tel.: +49 6434 9433-0
Fax.: +49 6434 9433-40
info@deutschmann.de
www.deutschmann.com

TNR_NS_EN_03.20